Architectural Testing

NFRC U-FACTOR, SHGC / VT, CONDENSATION RESISTANCE COMPUTER SIMULATION REPORT

Rendered to:

EARTHWISE GROUP, L.L.C.

SERIES/MODEL: 143.095 SS
145.095 SS

Baseline Product for Validation Testing

Series Model: ***143.095 SS***

Unit Size: Width: 59.00" Height: 47.25"

Simulated U-Factor: 0.284

Glazing Information

Layer 1:	SS Guardian RLE 71/38 (e=0.027,#2)
Gap 1:	0.563" Super Spacer (ZF-S) - 90% Argon Fill
Layer 2:	SS Guardian RLE 71/38 (e=0.027,#4)
Gap 2:	
Layer 3:	

Reinforcement Option Description

Location	*Material*
Lock Stile, Keeper Stile	Aluminum

Report No.: 54090.06-116-45
Report Date: 04/01/05
Expiration Date: 03/30/09

130 Derry Court
York, PA 17402-9405
phone: 717-764-7700
fax: 717-764-4129
www.archtest.com

Architectural Testing

NFRC U-FACTOR, SHGC / VT, CONDENSATION RESISTANCE
COMPUTER SIMULATION REPORT

Rendered to:

EARTHWISE GROUP, L.L.C.
185 Union Avenue
Providence, Rhode Island 02909

Report No.:	54090.06-116-45
Simulation Date:	03/30/05
Report Date:	04/01/05
Expiration Date:	03/30/09

Project Summary: Architectural Testing, Inc. (ATI) was contracted to perform U-Factor, Solar Heat Gain Coefficient, Visible Transmittance, and Condensation Resistance* computer simulations in accordance with the National Fenestration Rating Council (NFRC). The products were evaluated in full compliance with NFRC requirements to the standards listed

**NFRC's Condensation Resistance rating is NOT equivalent to a Condensation Resistance Factor (CRF) determined in accordance with AAMA 1503.*

Standards:

NFRC 100-2004: *Procedure for Determining Fenestration Product U-Factors*
NFRC 200-2004: *Procedure for Determining Fenestration Product Solar Heat Gain Coefficient and Visible Transmittance at Normal Incidence*
NFRC 500-2004: *Procedure for Determining Fenestration Product Condensation Resistance Values*

Software:

Frame and Edge Modeling: THERM 5.2.14
Center-of-Glass Modeling: WINDOW 5.2.17
Total Product Calculations: WINDOW 5.2.17
Spectral Data Library: 14.1

Simulation Specimen Description:

Series/Model:	143.095 SS	145.095 SS
Type:	Horizontal Slider (Single)	
Frame Material:	Vinyl w/reinforcing - interlock only (VI)	
Sash Material:	Vinyl w/reinforcing - vertical members only (VV)	
Width:	1200 mm	
Height:	1500 mm	

130 Derry Court
York, PA 17402-9405
phone: 717-764-7700
fax: 717-764-4129
www.archtest.com

Technical Interpretations:

U-factor: None
SHGC: None

Modeling Assumptions:

U-factor:
1. The 143.095 SS and the 145.095 SS are individual product lines and can be grouped within the same validation matrix according to NFRC 100-2001 Section 1.4.1.
2. The 3/16" X 9/16", 3/16" X 5/8", 3/16" X 3/4", 1/4" X 5/8" Rectangular Muntins, 5.5mm X 18mm, 8mm X 18mm, 8mm X 25mm, 0.313" X 0.725" Contour Muntins, 7/16" X 3/8" Square Muntin, 5.9mm X 7.95mm Brass Caming Muntins were grouped for simulation purposes. The 7/16" X 3/8" Square Muntin was the group leader.
3. Tempered glass is simulated as clear annealed per NFRC 100-2004.

SHGC:
1. Tempered glass is simulated as clear annealed per NFRC 200-2004.

Specialty Products Table: The specialty products method allow the manufacturer to determine the overall product SHGC and VT for any glazing option. The center of glass SHGC and/or VT must be determined using WINDOW 5.2. The method gives overall product SHGC and VT indexed on center of glass properties.

143.095 SS	No Dividers	Dividers < 1"	Dividers >= 1"
$SHGC_0$	0.004	0.007	0.009
$SHGC_1$	0.789	0.707	0.630
VT_0	0.000	0.000	0.000
VT_1	0.785	0.700	0.620

145.095 SS	No Dividers	Dividers < 1"	Dividers >= 1"
$SHGC_0$	0.004	0.007	0.010
$SHGC_1$	0.781	0.700	0.623
VT_0	0.000	0.000	0.000
VT_1	0.777	0.693	0.613

$$SHGC_c = SHGC_0 + SHGC_c\,(SHGC_1 - SHGC_0)$$
$$VT_c = VT_0 + VT_c\,(VT_1 - VT_0)$$

Appendices: The following appendices contain material required by NFRC 100-2004, NFRC 200-2004, and NFRC 500-2004.

A. Drawings and Bills of Material used in simulation

Spacer Option Description

	Sealant		
Spacer Type	*Primary*	*Secondary*	*Dessicant*
PPG Intercept Spacer	Butyl Rubber	Butyl Rubber	Yes
Edgetech Super Spacer	Butyl Rubber	None	No
TruSeal DuraSeal Spacer	Butyl Rubber	Butyl Rubber	No
Aluminum Swiggle Spacer	Butyl Rubber	Butyl Rubber	No
Cardinal XL Edge Spacer	Silicone	PIB	Yes

Grid Option Description

Grid Size	*Grid Type*	*Grid Pattern*
3/16" X 9/16"	Allmetal Rectangular Muntin	3H x 2V
3/16" X 5/8"	Allmetal Rectangular Muntin	3H x 2V
3/16" X 3/4"	Allmetal Rectangular Muntin	3H x 2V
1/4" X 5/8"	Allmetal Rectangular Muntin	3H x 2V
5.5mm X 18mm	Allmetal Contour Muntin	3H x 2V
8mm X 18mm	Allmetal Contour Muntin	3H x 2V
8mm X 25mm	Allmetal Contour Muntin	3H x 2V
0.313" X 0.725"	Allmetal Contour Muntin	3H x 2V
7/16" X 3/8"	Square Muntin	3H x 2V
5.9mm X 7.95mm	Brass Caming Muntin	3H x 2V

Reinforcement Option Description

Location	*Material*
Lock Stile, Keeper Stile, Jamb Stile	Aluminum

Gas Filling Technique Description

Fill Type	*Method*
90% Argon	Single Probe
95% Argon	Dual Probe
90% Krypton	Dual Probe

Edge-of-Glass Construction - Fixed Sash

Interior Condition	PVC glazing bead with flexible vinyl fin against glass
Exterior Condition	Foam tape between sash leg and glass

Edge-of-Glass Construction - Operable Sash

Interior Condition	Foam tape between sash leg and glass
Exterior Condition	PVC glazing bead with flexible vinyl fin against glass

Weatherstripping

Type	*Qty.*	*Location*
Finpile	1 row	Sill, Bottom Rail, Head, Top Rail, Lock Rail, Jamb, Jamb Stile

Finish

Interior Condition	White PVC
Exterior Condition	White PVC

Hardware *(If modeling is required, continuous items are listed below)*

Type	*Qty.*	*Location*
None		

Sealing Rules *(To prevent air infiltration)*

Tape was applied to all interior sash crack locations.

Architectural Testing

U-Factor / CR

143.095 SS

		PPG Intercept Spacer			
		No Grids		Grids	
	Option Description	U-Factor	CR	U-Factor	CR
1	Clear / Clear - SS,DS - 3/4" IG	0.48	43	0.49	43
2	SS Clear / DS Clear - 3/4" IG	0.48	43	0.49	43
3	043 / Clear - SS,DS - 3/4" IG	0.34	54	0.36	54
4	043 / Clear w/ 90% Argon - SS,DS - 3/4" IG	0.31	57	0.32	57
5	041 / Clear w/ 90% Argon - DS - 3/4" IG	0.30	56	0.33	56
6	027 / Clear - SS,DS - 3/4" IG	0.34	54	0.35	54
7	027 / Clear w/ 90% Argon - SS,DS - 3/4" IG	0.30	57	0.32	57

		Super Spacer			
		No Grids		Grids	
	Option Description	U-Factor	CR	U-Factor	CR
8	Clear / Clear - SS,DS - 3/4" IG	0.47	45	0.48	45
9	DS Clear / SS Clear - 3/4" IG	0.47	45	0.48	45
10	DS Clear / SS Clear w/ 90% Argon - 3/4" IG	0.45	46	0.46	46
11	154 / Clear - DS - 3/4" IG	0.36	53	0.38	53
12	154 / Clear w/ 95% Argon- DS - 3/4" IG	0.32	56	0.35	56
13	043 / Clear - SS,DS - 3/4" IG	0.33	56	0.35	56
14	043 / Clear w/ 90% Argon- SS,DS - 3/4" IG	0.30	60	0.32	60
15	041 / Clear - SS,DS - 3/4" IG	0.33	56	0.35	56
16	041 / Clear w/ 90% Argon- SS,DS - 3/4" IG	0.30	60	0.31	60
17	027 / Clear - SS,DS - 3/4" IG	0.33	57	0.35	57
18	027 / Clear w/ 90% Argon - SS,DS - 3/4" IG	0.29	60	0.31	60
19	027 / 027 w/ 90% Argon - SS,DS - 3/4" IG	0.29	61	0.30	61

Architectural Testing

U-Factor / CR

143.095 SS

		Duraseal Spacer			
		No Grids		*Grids*	
	Option Description	**U-Factor**	**CR**	**U-Factor**	**CR**
20	Clear / Clear - SS,DS - 3/4" IG	0.47	44	0.49	44
21	044 / Clear - SS,DS - 3/4" IG	0.34	56	0.35	56
22	044 / Clear w/ 90% Argon - SS,DS - 3/4" IG	0.30	59	0.32	59
23	041 / Clear - SS,DS - 3/4" IG	0.34	56	0.35	56
24	041 / Clear w/ 90% Argon - SS,DS - 3/4" IG	0.30	59	0.32	59
25	027 / Clear w/ 90% Argon - DS - 3/4" IG	0.29	59	0.32	59

		Aluminum Swiggle Spacer			
		No Grids		*Grids*	
	Option Description	**U-Factor**	**CR**	**U-Factor**	**CR**
26	Clear / Clear - SS,DS - 3/4" IG	0.47	44	0.49	44
27	041 / Clear - SS,DS - 3/4" IG	0.34	55	0.36	55
28	041 / Clear w/ 90% Argon - SS,DS - 3/4" IG	0.30	58	0.32	58
29	027 / Clear - SS,DS - 3/4" IG	0.33	55	0.33	55
30	027 / Clear w/ 90% Argon - SS,DS - 3/4" IG	0.30	58	0.31	58

Architectural Testing

U-Factor / CR

143.095 SS

		Cardinal XL Edge Spacer			
		No Grids		*Grids*	
	Option Description	**U-Factor**	**CR**	**U-Factor**	**CR**
31	Clear / Clear - DS - 3/4" IG	0.47	43	0.49	43
32	041 / Clear w/ 90% Argon - DS - 3/4" IG	0.30	57	0.32	57

		Triple Glazed Super Spacer			
		No Grids		*Grids*	
	Option Description	**U-Factor**	**CR**	**U-Factor**	**CR**
33	Clear / Clear / Clear - SS - 3/4" IG	0.40	51	-	-
34	027 / Clear / Clear - SS - 3/4" IG	0.34	56	-	-
35	027 / Clear / Clear w/ 90% Argon - SS - 3/4" IG	0.30	60	-	-
36	027 / 027 / Clear - SS - 3/4" IG	0.31	59	-	-
37	027 / 027 / Clear w/ 90% Argon - SS - 3/4" IG	0.26	63	-	-

Notes :

1. All options available with bronze and grey tints on exterior surface.
2. "5m" stands for 3/16" glass thickness
3. Low-E's used:

   0.043 = PPG Solarban 60
   0.041 = Cardinal E172
   0.027 = Guardian RLE 71/38
   0.154 = LOF Advantage
   0.044 = Guardian PPII

Architectural Testing

U-Factor / CR

145.095 SS

		PPG Intercept Spacer			
		No Grids		Grids	
	Option Description	U-Factor	CR	U-Factor	CR
1	Clear / Clear - SS,DS - 3/4" IG	0.48	43	0.49	43
2	SS Clear / DS Clear - 3/4" IG	0.48	43	0.49	43
3	043 / Clear - SS,DS - 3/4" IG	0.34	53	0.36	53
4	043 / Clear w/ 90% Argon - SS,DS - 3/4" IG	0.31	56	0.33	56
5	041 / Clear w/ 90% Argon - DS - 3/4" IG	0.31	55	0.33	55
6	027 / Clear - SS,DS - 3/4" IG	0.34	54	0.36	54
7	027 / Clear w/ 90% Argon - SS,DS - 3/4" IG	0.31	57	0.32	57

		Super Spacer			
		No Grids		Grids	
	Option Description	U-Factor	CR	U-Factor	CR
8	Clear / Clear - SS,DS - 3/4" IG	0.47	45	0.48	45
9	DS Clear / SS Clear - 3/4" IG	0.47	45	0.49	45
10	DS Clear / SS Clear w/ 90% Argon - 3/4" IG	0.45	46	0.47	46
11	154 / Clear - DS - 3/4" IG	0.36	53	0.39	53
12	154 / Clear w/ 95% Argon- DS - 3/4" IG	0.33	56	0.35	56
13	043 / Clear - SS,DS - 3/4" IG	0.34	56	0.35	56
14	043 / Clear w/ 90% Argon- SS,DS - 3/4" IG	0.30	59	0.32	59
15	041 / Clear - SS,DS - 3/4" IG	0.34	56	0.35	56
16	041 / Clear w/ 90% Argon- SS,DS - 3/4" IG	0.30	59	0.32	59
17	027 / Clear - SS,DS - 3/4" IG	0.33	56	0.35	56
18	027 / Clear w/ 90% Argon - SS,DS - 3/4" IG	0.30	59	0.31	59
19	027 / 027 w/ 90% Argon - SS,DS - 3/4" IG	0.29	60	0.31	60

Architectural Testing

U-Factor / CR

145.095 SS

		Duraseal Spacer			
		No Grids		*Grids*	
	Option Description	**U-Factor**	**CR**	**U-Factor**	**CR**
20	Clear / Clear - SS,DS - 3/4" IG	0.48	44	0.49	44
21	044 / Clear - SS,DS - 3/4" IG	0.34	55	0.36	55
22	044 / Clear w/ 90% Argon - SS,DS - 3/4" IG	0.30	58	0.32	58
23	041 / Clear - SS,DS - 3/4" IG	0.34	55	0.36	55
24	041 / Clear w/ 90% Argon - SS,DS - 3/4" IG	0.30	58	0.32	58
25	027 / Clear w/ 90% Argon - DS - 3/4" IG	0.30	58	0.32	58

		Aluminum Swiggle Spacer			
		No Grids		*Grids*	
	Option Description	**U-Factor**	**CR**	**U-Factor**	**CR**
26	Clear / Clear - SS,DS - 3/4" IG	0.48	44	0.49	44
27	041 / Clear - SS,DS - 3/4" IG	0.34	54	0.36	54
28	041 / Clear w/ 90% Argon - SS,DS - 3/4" IG	0.31	57	0.32	57
29	027 / Clear - SS,DS - 3/4" IG	0.34	54	0.34	54
30	027 / Clear w/ 90% Argon - SS,DS - 3/4" IG	0.30	58	0.31	58

Architectural Testing

U-Factor / CR

145.095 SS

		Cardinal XL Edge Spacer			
		No Grids		*Grids*	
	Option Description	**U-Factor**	**CR**	**U-Factor**	**CR**
31	Clear / Clear - DS - 3/4" IG	0.47	43	0.49	43
32	041 / Clear w/ 90% Argon - DS - 3/4" IG	0.30	57	0.33	57

		Triple Glazed Super Spacer			
		No Grids		*Grids*	
	Option Description	**U-Factor**	**CR**	**U-Factor**	**CR**
33	Clear / Clear / Clear - SS - 3/4" IG	0.40	51	-	-
34	027 / Clear / Clear - SS - 3/4" IG	0.35	56	-	-
35	027 / Clear / Clear w/ 90% Argon - SS - 3/4" IG	0.31	60	-	-
36	027 / 027 / Clear - SS - 3/4" IG	0.31	59	-	-
37	027 / 027 / Clear w/ 90% Argon - SS - 3/4" IG	0.27	63	-	-

Notes :

1. All options available with bronze and grey tints on exterior surface.
2. "5m" stands for 3/16" glass thickness
3. Low-E's used:

   0.043 = PPG Solarban 60
   0.041 = Cardinal E172
   0.027 = Guardian RLE 71/38
   0.154 = LOF Advantage
   0.044 = Guardian PPII

SHGC/VT

143.095 SS

Architectural Testing

	Option Description	SHGC			VT		
		No Grids	<1	>1	No Grids	<1	>1
1	Clear / Clear - SS,DS	0.62	0.56	0.50	0.64	0.57	0.51
2	Solar Bronze / Clear - SS,DS	0.50	0.45	0.40	0.48	0.43	0.38
3	Solar Gray / Clear - SS,DS	0.46	0.41	0.37	0.43	0.38	0.34
4	043 / Clear - SS,DS	0.31	0.28	0.25	0.56	0.50	0.44
5	Clear / 043 - SS,DS	0.38	0.34	0.30	0.56	0.50	0.44
6	Solar Bronze / 043 - SS,DS	0.31	0.28	0.25	0.41	0.37	0.33
7	Solar Gray / 043 - SS,DS	0.29	0.26	0.23	0.37	0.33	0.29
8	041 / Clear - SS,DS	0.33	0.30	0.27	0.57	0.50	0.45
9	Clear / 041 - SS,DS	0.39	0.35	0.32	0.57	0.50	0.45
10	Solar Bronze / 041 - SS,DS	0.31	0.28	0.25	0.42	0.37	0.33
11	Solar Gray / 041 - SS,DS	0.29	0.26	0.24	0.38	0.34	0.30
12	027 / Clear - SS,DS	0.31	0.28	0.25	0.56	0.50	0.44
13	Clear / 027 - SS,DS	0.38	0.34	0.31	0.56	0.50	0.44
14	Solar Bronze - 027 - SS,DS	0.30	0.27	0.25	0.41	0.37	0.33
15	Solar Gray / 027 - SS,DS	0.28	0.26	0.23	0.37	0.33	0.29
16	154 / Clear - SS,DS	0.51	0.46	0.41	0.59	0.52	0.46
17	Clear / 154 - SS.DS	0.56	0.51	0.45	0.59	0.52	0.46
18	Solar Bronze / 154 - SS,DS	0.45	0.40	0.36	0.44	0.39	0.34
19	Solar Gray / 154 - SS,DS	0.41	0.37	0.33	0.39	0.35	0.31
20	044 / Clear - SS,DS	0.33	0.29	0.26	0.54	0.48	0.43
21	Clear / 044 - SS,DS	0.38	0.34	0.30	0.54	0.48	0.43
22	Solar Bronze - 044 - SS,DS	0.30	0.27	0.25	0.40	0.36	0.32
23	Solar Gray / 044 - SS,DS	0.28	0.26	0.23	0.36	0.32	0.29
24	Clear / Clear / Clear - SS	0.57	0.51	0.45	0.60	0.53	0.47
25	027 / Clear / Clear - SS	0.29	0.26	0.24	0.51	0.46	0.41
26	027 / 027 / Clear - SS	0.25	0.23	0.21	0.44	0.39	0.35

Notes :

1. "5m" stands for 3/16" glass thickness
3. Low-E's used:

0.043 = PPG Solarban 60
0.041 = Cardinal E172
0.027 = Guardian RLE 71/38
0.154 = LOF Advantage
0.044 = Guardian PPII

SHGC/VT

145.095 SS

Architectural Testing

	Option Description	SHGC			VT		
		No Grids	<1	>1	No Grids	<1	>1
1	Clear / Clear - SS,DS	0.62	0.55	0.49	0.64	0.57	0.50
2	Solar Bronze / Clear - SS,DS	0.49	0.44	0.39	0.47	0.42	0.37
3	Solar Gray / Clear - SS,DS	0.46	0.41	0.37	0.43	0.38	0.34
4	043 / Clear - SS,DS	0.31	0.28	0.25	0.55	0.49	0.43
5	Clear / 043 - SS,DS	0.37	0.34	0.30	0.55	0.49	0.43
6	Solar Bronze / 043 - SS,DS	0.30	0.27	0.25	0.41	0.36	0.32
7	Solar Gray / 043 - SS,DS	0.28	0.26	0.23	0.37	0.33	0.29
8	041 / Clear - SS,DS	0.33	0.29	0.26	0.56	0.50	0.44
9	Clear / 041 - SS,DS	0.39	0.35	0.31	0.56	0.50	0.44
10	Solar Bronze / 041 - SS,DS	0.31	0.28	0.25	0.41	0.37	0.33
11	Solar Gray / 041 - SS,DS	0.29	0.26	0.24	0.37	0.33	0.29
12	027 / Clear - SS,DS	0.31	0.28	0.25	0.55	0.49	0.44
13	Clear / 027 - SS,DS	0.38	0.34	0.30	0.55	0.49	0.44
14	Solar Bronze - 027 - SS,DS	0.30	0.27	0.24	0.41	0.36	0.32
15	Solar Gray / 027 - SS,DS	0.28	0.25	0.23	0.37	0.33	0.29
16	154 / Clear - SS,DS	0.51	0.46	0.41	0.58	0.52	0.46
17	Clear / 154 - SS.DS	0.56	0.50	0.45	0.58	0.52	0.46
18	Solar Bronze / 154 - SS,DS	0.44	0.40	0.36	0.43	0.38	0.34
19	Solar Gray / 154 - SS,DS	0.41	0.37	0.33	0.39	0.35	0.31
20	044 / Clear - SS,DS	0.32	0.29	0.26	0.54	0.48	0.42
21	Clear / 044 - SS,DS	0.37	0.34	0.30	0.54	0.48	0.42
22	Solar Bronze - 044 - SS,DS	0.30	0.27	0.24	0.40	0.35	0.31
23	Solar Gray / 044 - SS,DS	0.28	0.25	0.23	0.36	0.32	0.28
24	Clear / Clear / Clear - SS	0.56	0.50	0.45	0.59	0.53	0.47
25	027 / Clear / Clear - SS	0.29	0.26	0.24	0.51	0.45	0.40
26	027 / 027 / Clear - SS	0.25	0.23	0.20	0.44	0.39	0.35

Notes :

1. "5m" stands for 3/16" glass thickness
3. Low-E's used:

   0.043 = PPG Solarban 60
   0.041 = Cardinal E172
   0.027 = Guardian RLE 71/38
   0.154 = LOF Advantage
   0.044 = Guardian PPII

This report is reissued in the name of Earthwise Group, L.L.C. through written authorization of Dayton Technologies to whom the original report was rendered. The original Dayton Report No. is 54090.01-116-45.

This simulation method does not include procedures to determine the Condensation Resistance due to either air movement through the specimen or solar radiation effects. As a consequence, the Condensation Resistance results obtained do not reflect performance which may be expected from field installations because they do not account for solar radiation, air leakage effects, and the thermal bridge effects that may occur due to the specific design and construction of the fenestration system opening. Therefore, it should be recognized that the Condensation Resistance results obtained from this simulation method are for controlled laboratory conditions and should only be used for fenestration product comparisons and as input to condensation resistance performance analyses, which also include solar, air leakage and thermal bridge effects.

Ratings included in this report are for submittal to an NFRC-licensed IA for certification purposes and are not meant to be used for labeling purposes. Only those values identified on a valid Certification Authorization Report (CAR) are to be used for labeling purposes.

Detailed drawings, simulation data disks, and a copy of this report will be retained by ATI for a period of four years. The above results are the exclusive property of the client so named herein and are applicable to the sample simulated. ATI is an NFRC accredited simulation laboratory and all simulations were conducted in full compliance with NFRC approved procedures and specifications. The NFRC procedure requires that the computational results be verified through actual test results. This report does not constitute an opinion or endorsement by this laboratory. This report may not be reproduced except in full without the approval of ATI.

For ARCHITECTURAL TESTING, INC.:

SIMULATED BY:

Digitally Signed by: Eric S. Leitner

Eric Leitner
Simulation Technician

REVIEWED BY:

Digitally Signed by: Michael J. Thoman

Michael J. Thoman
Director - Simulations & Thermal Testing
Simulator In Responsible Charge

EL:ssr
54090.06-116-45

Attachments (pages):
Appendix A: Drawings and Bills of Material (28)

Revision Log

Rev. #	Date	Page(s)	Revision(s)
0	4/1/2005	All	Reiusse .01 report to Earthwise Group, L.L.C. with only their glazing options

All drawings and Bills of Material used in simulating this product are enclosed in this Appendix.

APPENDIX A

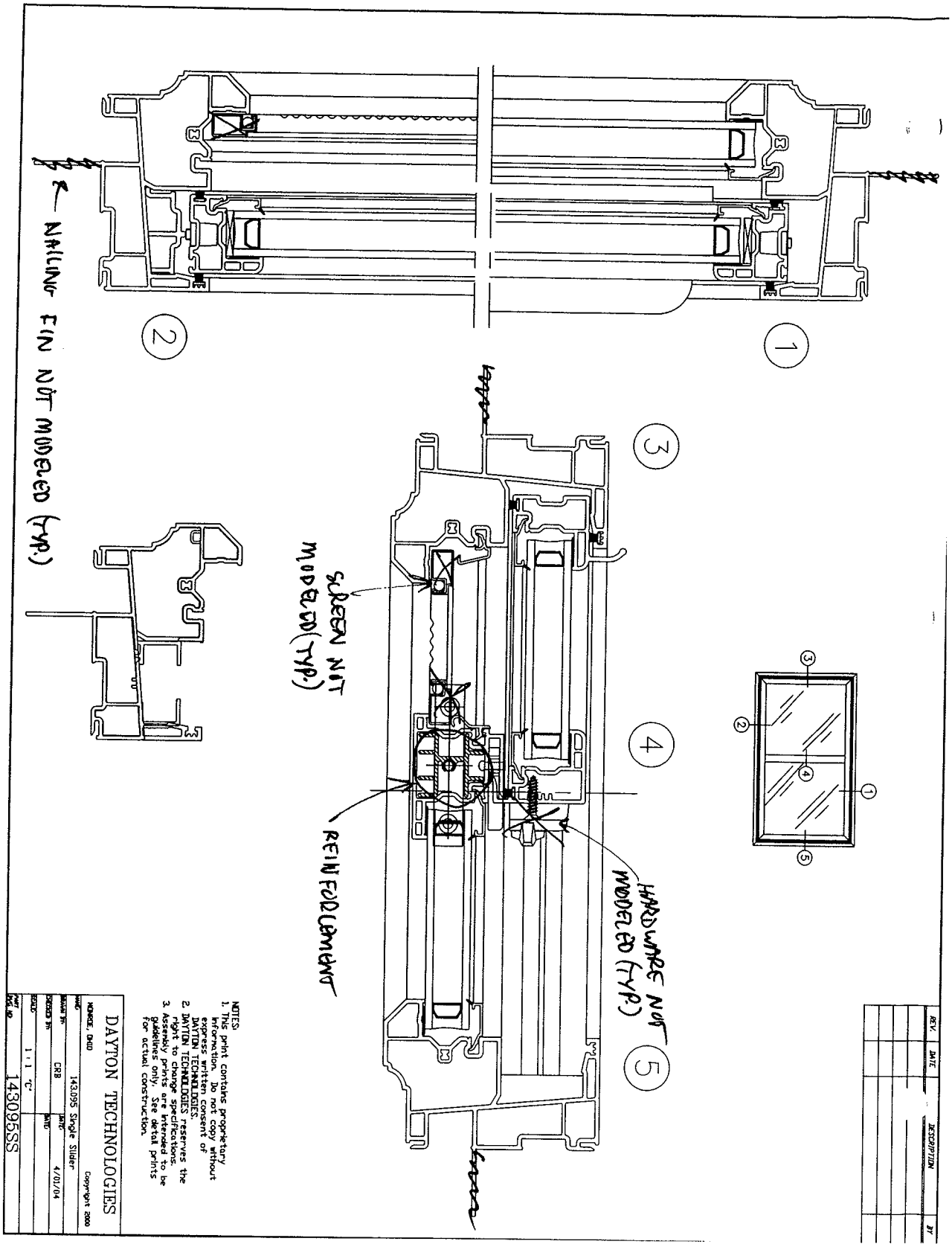

Architectural Testing

Test sample complies with these details.
Deviations are noted.

Report# 54090

Date 3/30/05 Tech ESL

CAD MAINTAINED. CHANGES SHALL BE INCORPORATED BY THE DESIGN ACTIVITY.

REV STATUS		REVISION HIS			
REV	SH	REV.	DESCRIPTION	DATE	APPROVED
A	1				
-	-				

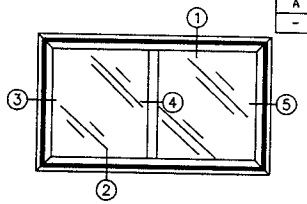

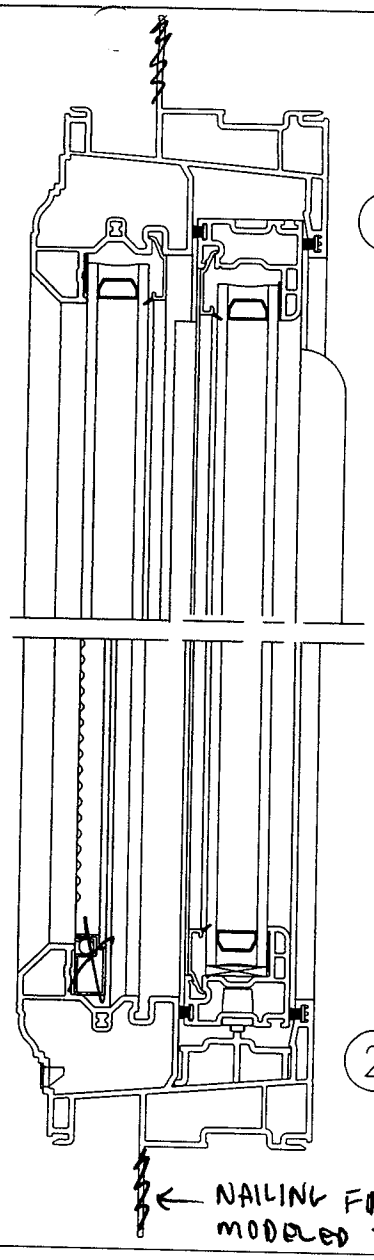

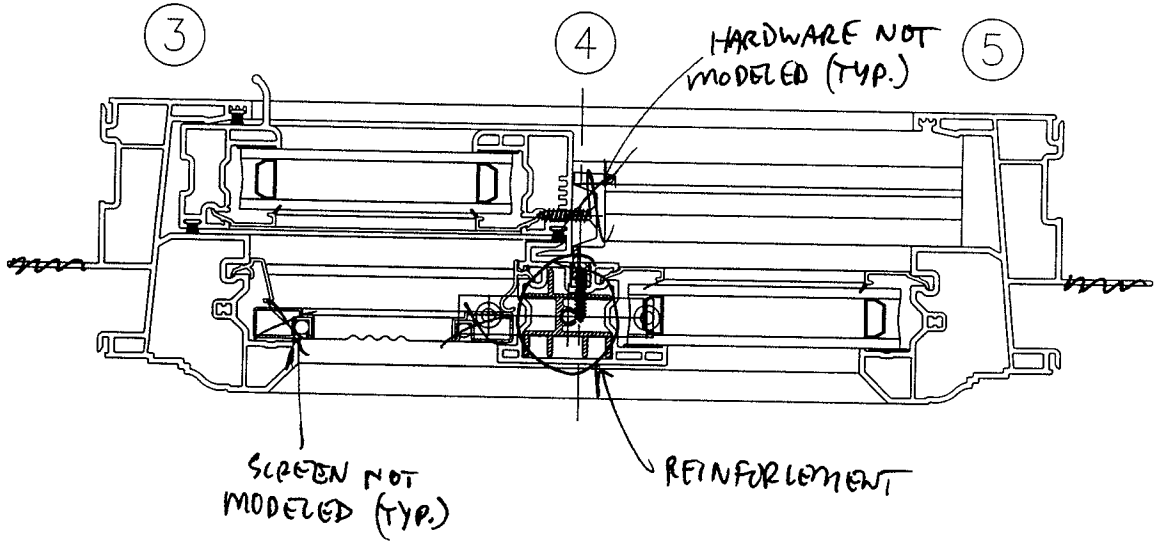

LAYOUT DRAWING

THIS DOCUMENT CONTAINS PROPRIETARY INFORMATION. DO NOT COPY OR DISCLOSE THIS INFORMATION WITHOUT THE EXPRESS WRITTEN CONSENT OF DAYTON TECHNOLOGIES. DAYTON TECHNOLOGIES RESERVES THE RIGHT TO CHANGE THIS DRAWING AND ANY ASSOCIATED DOCUMENTS.

UNLESS OTHERWISE SPECIFIED
DIM ARE IN INCHES
TOL ON ANGLE ± 1°
2 PL: ± .01 3 PL: ± .005
INTERPRET DIM AND TOL PER
ASME Y14.5M - 1994 ----
THIRD ANGLE PROJECTION

DESIGN BY:	CRB
DATE:	03/06/27
DRAWN BY:	HLS
DATE:	03/04/13
AUTH:	
DATE:	
FILENAME:	pd/assembly/145091SS.wl

Dayton TECHNOLOGIES deceuninck NORTH AMERICA

COPYRIGHT 2004
2351 NORTH GARVER ROAD
MONROE, OHIO 45050

NAME: 145095 SINGLE SLIDER

C | DWG. NO: 145095SS | REV.

SCALE: 1 : 1 | (LBS/FT): -.--- | SHEET: 1 OF 1

Architectural Testing

Test sample complies with these details.
Deviations are noted.

Report# 54090
Date 3/20/05 Tech ESL

CAD MAINT INCORPORA. CHANGES SHALL BE THE DESIGN ACTIVITY.

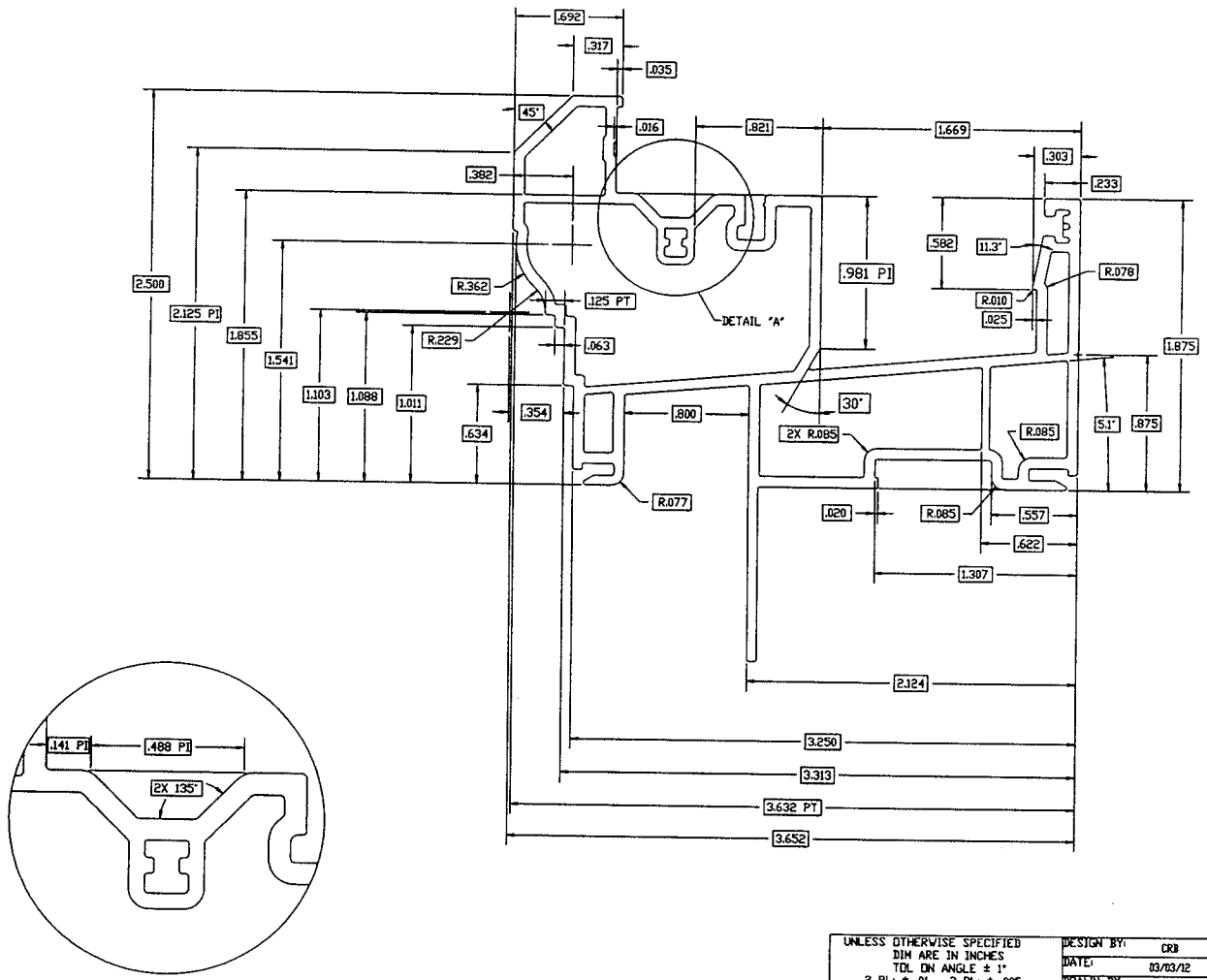

DEATAIL "A"
SCALE: 4 : 1

THIS DOCUMENT CONTAINS PROPRIETARY INFORMATION. DO NOT COPY OR DISCLOSE THIS INFORMATION WITHOUT THE EXPRESS WRITTEN CONSENT OF DAYTON TECHNOLOGIES. DAYTON TECHNOLOGIES RESERVES THE RIGHT TO CHANGE THIS DRAWING AND ANY ASSOCIATED DOCUMENTS.

UNLESS OTHERWISE SPECIFIED
DIM ARE IN INCHES
TOL ON ANGLE ± 1°
2 PL: ± .01 3 PL: ± .005
INTERPRET DIM AND TOL PER
ASME Y14.5M - 1994

THIRD ANGLE PROJECTION

DESIGN BY:	CRB
DATE:	03/03/12
DRAWN BY:	TJH
DATE:	03/06/17
AUTH:	
DATE:	
FILENAME:	Hpd/cad/parts/8661/10008661_SH3.wl

Dayton TECHNOLOGIES deceuninck NORTH AMERICA

COPYRIGHT 2002
2311 NORTH CARVER ROAD
MONROE, OHIO 45050

NAME: MAIN FRAME-SS

C | DWG. NO: 10008661_SH3 | REV. A

SCALE: 1 : 1 | (LBS/FT): .854 | SHEET: 3

Architectural Testing

Test sample complies with these details.
Deviations are noted.

Report# 54070

Date 3/30/05 Tech EZ

143.000 SS FRAME - BILL OF MATERIALS

ITEM NO.	DESCRIPTION	QUANTITY	PART NO.	FAB DWG. NO	SOURCE
1	HEAD	1	P8684	P8684F01	A
2	SILL	1	P8684	P8684F02	A
3	JAMB	2	P8684	P8684F03	A
4	FIXED MEETING RAIL	1	P8511	P8511-F-10	A
5					
6	HORIZONTAL GLAZING BEAD	2	P8127	P8127F01	A
7	VERTICAL GLAZING BEAD	2	P8127	P8127F01	A
8	SLIDER TRACK INSERT	1	P8466	P8466F01	A
9	SMALL SCREEN RETAINER	1	P8263	P8263F01	A
10	SCREEN RETAINER	1	P8268	P8268F01	A
11					
12	OPTIONAL: MEETING RAIL GASKET	2 EACH	G-A302-L1G153 / G-A302-L1G154		CC
13	FIXED MEETING RAIL INSERT	1	6189		EEE, OOO
14	FIXED MEETING RAIL ANCHOR	2	#12512 or #79543 (includes gasket)		D
15	CENTER FIN WEATHERSTRIPPING	AS REQ'D	.290 HT. x .187 BK.		F, I
16					
17	3/4" INSULATED GLASS	1			R
18	GLAZING COMPOUND	AS REQ'D	SBC2150		T
19	SETTING BLOCKS (Refer to IG Supplier Guidelir	AS REQ'D	1/8" x 3/4"		W
20	INSTALLATION PLUGS (Optional)	4	9946		F, I
21	KEEPER	1 or 2	13008		D
22	KEEPER RIVET	2 or 4	1/8" DIA. x .315 GRIP		B
23	WEEP COVER	2	97-03-00-00		RRR
24					
25	SCREEN ASSEMBLY	1	3/8 x 3/4		GGG
26	INSTALLATION SCREWS (R&R)	4	#8 x 3" PPH		B, Z
27	FIXED MEETING RAIL ANCHOR SCREW	4	#8 x 1.000 PFH		B
28	MEETING RAIL INSERT SCREWS	2	#8 X 1 1/2" PPH		Z

Rev	Date	Description	By
A	10/7/2003	ADDED HO PRODUCTS GASKET INFO	CRB

DAYTON TECHNOLOGIES
MONROE, OH
COPYRIGHT 2000

NAME:	143.000SS
DWN BY:	CRB 8/10/2000
CHKD BY:	
DWG NO:	143000SS.xls

Architectural Testing

Test sample complies with these details.
Deviations are noted.

Report# 54090
Date 3/30/05 Tech ESL

145.000 SS FRAME - BILL OF MATERIALS - NC

SWEEPLOCK

ITEM NO.	DESCRIPTION	QUANTITY	PART NO.	FAB DWG. NO	SOURCE
1	HEAD	1	10008661 ✓	10008661F01	A
2	SILL	1	10008661	10008661F02	A
3	JAMB	2	10008661	10008661F03	A
4	FIXED MEETING RAIL	1	10008515 ✓	10008515F02	A
5					
6	HORIZONTAL GLAZING BEAD	2	10008127 ✓	P8127F01	A
7	VERTICAL GLAZING BEAD	2	10008127	P8127F01	A
8	SLIDER TRACK INSERT	1	10008466	P8466F01	A
9	SCREEN RETAINER	1	P8263	STRAIGHT CUT	A
10	SCREEN RETAINER	1	P8268	STRAIGHT CUT	A
11					
12					
13	FIXED MEETING RAIL INSERT	1	10300057		OOO
14	FIXED MEETING RAIL ANCHOR	2	1539		VVV
15	CENTER FIN WEATHERSTRIPPING	AS REQ'D	.290 HT. x .187 BK.		F, I
16					
17	3/4" INSULATED GLASS	1			R
18	GLAZING COMPOUND	AS REQ'D	SBC2150		T
19	SETTING BLOCKS (Refer to IG Supplier Guidelin	AS REQ'D	1/8" x 3/4"		W
20	INSTALLATION PLUGS (Optional)	4	9946		F, I
21	KEEPER	1 or 2	13008		D
22	KEEPER RIVET	2 or 4	1/8" DIA. x .315 GRIP		B
23	WEEP COVER	2	97-03-00-00		RRR
24					
25	SCREEN ASSEMBLY	1	3/8 x 3/4		GGG
26	INSTALLATION SCREWS (R&R)	4	#8 x 3" PPH		B, Z
27	FIXED MEETING RAIL ANCHOR SCREW	4	#8 x 1.000 PFH		B
28	MEETING RAIL INSERT SCREWS	2	#8 X 1 1/2" PPH		Z

Rev	Date	Description	By

DAYTON TECHNOLOGIES

MONROE, OH

COPYRIGHT 2003

NAME:	145.000SS	
DWN BY:	CRB	10/1/2003
CHKD BY:		
DWG NO:	145000SS.xls	

Architectural Testing

Test sample complies with these details.
Deviations are noted.

Report# 54090

Date 3/30/05 Tech CJL

000.095 SS SASH - BILL OF MATERIALS (Mastic)

ITEM NO.	DESCRIPTION	QUANTITY	PART NO.	FAB DWG. NO	SOURCE
41	TOP RAIL	2	P8842 ✓	P8852-F-04	A
42	LOCK RAIL	2	P8845 ✓	P8855-F-07	A
43	PULL STILE	2	P8840 ✓	P8850-F-02	A
44	BOTTOM RAIL (Ashland Roller)	2	P8842	P8852-F-08	A
45					
46					
47	HORIZONTAL GLAZING BEAD	4	P8127 ✓	P8127-F-01	A
48	VERTICAL GLAZING BEAD	4	P8127	P8127-F-01	A
49					
50	3/4" INSULATED GLASS	2			
51	GLAZING COMPOUND	AS REQ'D			
52	SETTING BLOCKS (Refer to IG Supplier Guidelin	AS REQ'D	1/8" x 3/4"		
53					
54	CENTER FIN WEATHERSTRIPPING	AS REQ'D	.290 HT. x .187 BK.		
55	SASH REINFORCEMENT	AS REQ'D	A6202 ✓	A6202-F-01	EEE
56					
57	SASH ROLLER	2 OR 4	79529		D
58	LOCK /CAM	2 OR 4	L20010001R01		D
59					
60	SCREW FOR LOCK ASSEMBLY	4 OR 8	#8 x 3/4 PAINTED PFH		
61					
62					
63					
64					
65					
66					

Rev	Date	Description	By

DAYTON TECHNOLOGIES
MONROE, OH
COPYRIGHT 2004

NAME:	000.095SS Mastic
DWN BY:	CRB 8/23/2000
CHKD BY:	
DWG NO:	000095SS.xls

Architectural Testing

Test sample complies with these details.
Deviations are noted.

Report# 54696
Date 8/30/05 Tech EJL

UNLESS OTHERWISE NOTED THE FOLLOWING TOLERANCES APPLY

.001 - .100	±.005	1.001 - 1.500	±.020
.101 - .500	±.010	1.501 - 2.000	±.025
.501 - 1.000	±.015	2.001 - & UP	±.030

UNSPECIFIED ANGLES ±1° - WOODGRAIN SURFACES ADD .007"

- - - - = EXPOSED SURFACE — · — · WOODGRAIN SURFACE

COLOR ☒ WH ☒ DS ☐ EB W ☒ OTH CREME WHITE

PART WT. (LBS/FT)	RIGID	CAP	FLEX	ALUM	STEEL	TOTAL
	.850					.850

PROFILE: 8684

REVISIONS

REV	DESCRIPTION	DATE	ENG.
-	-----	-----	---

NOTES:
1. EXTERIOR WALL THICKNESS CRITICAL: TO BE MEASURED ON ALL 4 SIDES.
2. INTERIOR WALL THICKNESS REFERENCE.

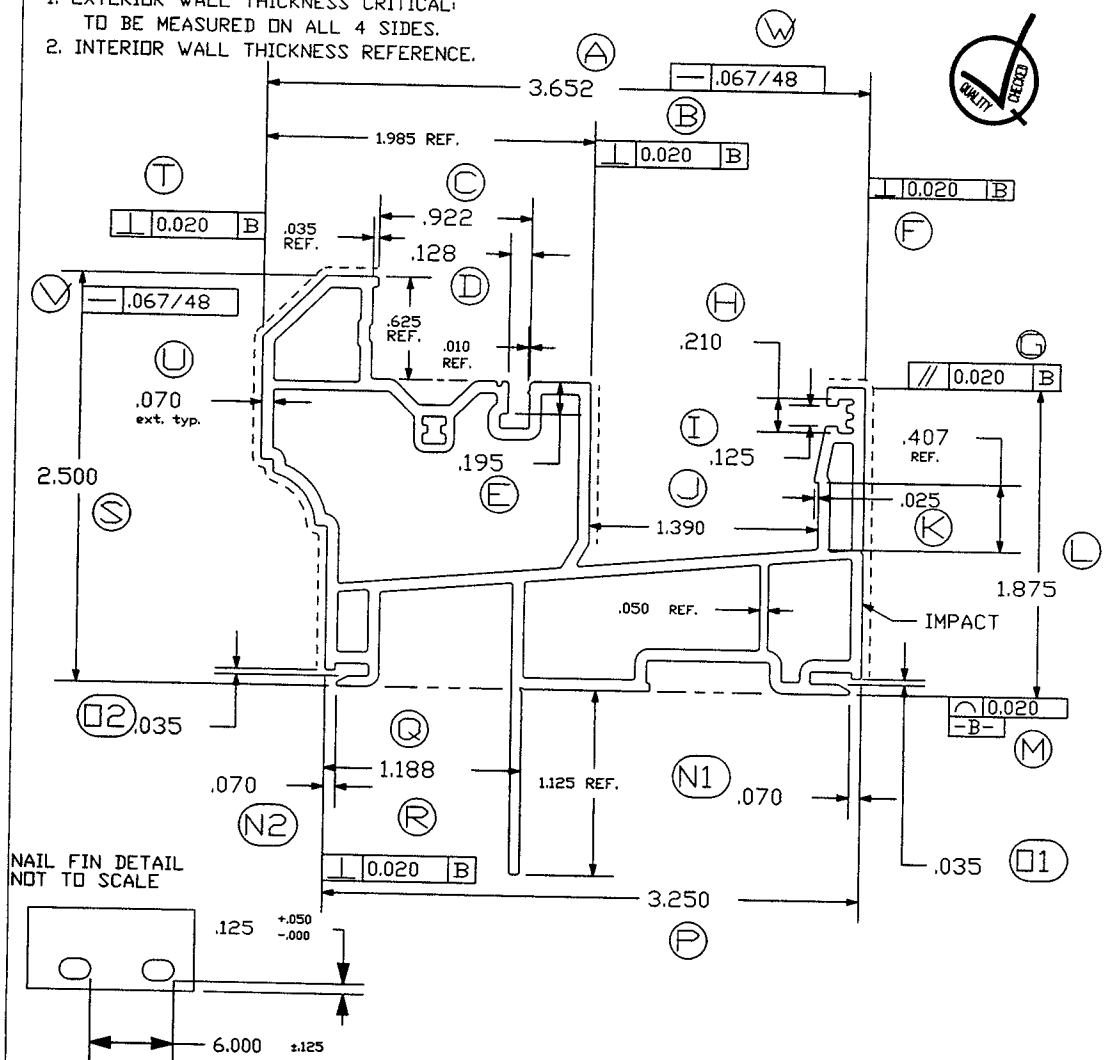

FITS WITH: P8684, P8127, P5470, P8466

IMPACT AREA: NOTED

CONTROL DIMENSIONS

DIM	METH	MIN	ENG	MAX	DIM	METH	MIN	ENG	MAX
A	V	3.622	3.652	3.682	U	V	.060	.070	.080
B	V	⊥ 0.020 B			V	G	— .067/48		
C	V	.902	.922	.942	W	G	— .067/48		
D	V	.118	.128	.138	X				
E	V	.185	.195	.205	Y				
F	V	⊥ 0.020 B			Z				
G	V	// 0.020 B			AA				
H	V	GAUGE I-1 & 1-2A			BB				
I	V	GAUGE I-1 & 1-2A			CC				
J	V	1.370	1.390	1.410	DD				
K	V	.015	.025	.035	EE				
L	V	1.855	1.875	1.895	FF				
M	V	⌒ 0.025			GG				
N(2)	V	.050	.070	.090	HH				
O(2)	V	.025	.035	.045	II				
P	V	3.220	3.250	3.280	JJ				
Q	V	1.168	1.188	1.208	KK				
R	V	⊥ 0.020 B			LL				
S	V	2.480	2.500	2.520	MM				
T	V	⊥ 0.020 B			NN				

Dayton TECHNOLOGIES
A MEMBER OF THE DECEUNINCK GROUP

COPYRIGHT 2000
DAYTON TECHNOLOGIES
351 N. GARVER RD.
MONROE, OHIO 45050

NAME:	MAIN FRAME - SS		
DRAWN BY:	CRB	DATE:	5/12/00
CHECKED BY:		DATE:	
FILENAME:	/pd/ug/profiles/p8684.prt		
SCALE:	1 : 1	DWG NO:	p8684.prt A

Architectural Testing

Test sample complies with these details.
Deviations are noted.

Report# 54096

Date 3/30/05 Tech BL

CAD MAINTAINED. CHANGES SHALL BE INCORPORATED BY THE DESIGN ACTIVITY.

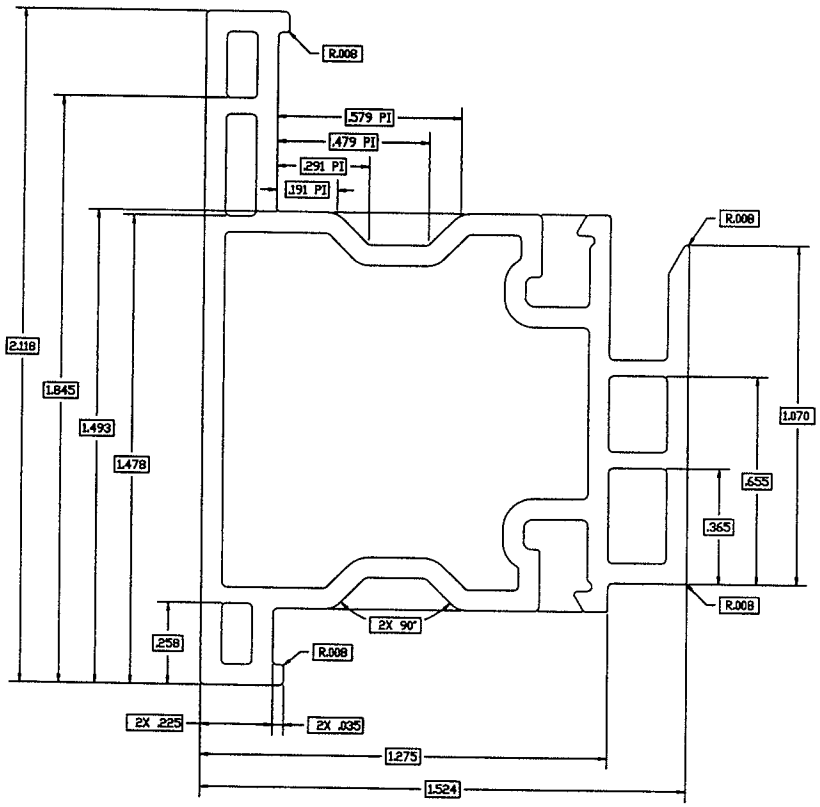

Architectural Testing

Test sample complies with these details.
Deviations are noted.

Report# 54090

Date 3/30/05 Tech ER

THIS DOCUMENT CONTAINS PROPRIETARY INFORMATION. DO NOT COPY OR DISCLOSE THIS INFORMATION WITHOUT THE EXPRESS WRITTEN CONSENT OF DAYTON TECHNOLOGIES. DAYTON TECHNOLOGIES RESERVES THE RIGHT TO CHANGE THIS DRAWING AND ANY ASSOCIATED DOCUMENTS.

UNLESS OTHERWISE SPECIFIED
DIM ARE IN INCHES
TOL ON ANGLE ± 1°
2 PL: ± .01 3 PL: ± .005
INTERPRET DIM AND TOL PER
ASME Y14.5M - 1994 -----
THIRD ANGLE PROJECTION

DESIGN BY:	MTC
DATE:	93/08/20
DRAWN BY:	TJH
DATE:	03/08/20
AUTH:	
DATE:	
FILENAME:	Hpd/cad/parts/8511/10008511_SH3.wl

Dayton TECHNOLOGIES

deceuninc. MOTION AMERICAS

COPYRIGHT 2002
2351 NORTH GARVER ROAD
MONROE OHIO 45050

NAME: MEETING RAIL

C | DWG NO: 10008511_SH3 | REV -

SCALE: 1 : 1 | LBS/FT: .380 | SHEET: 3

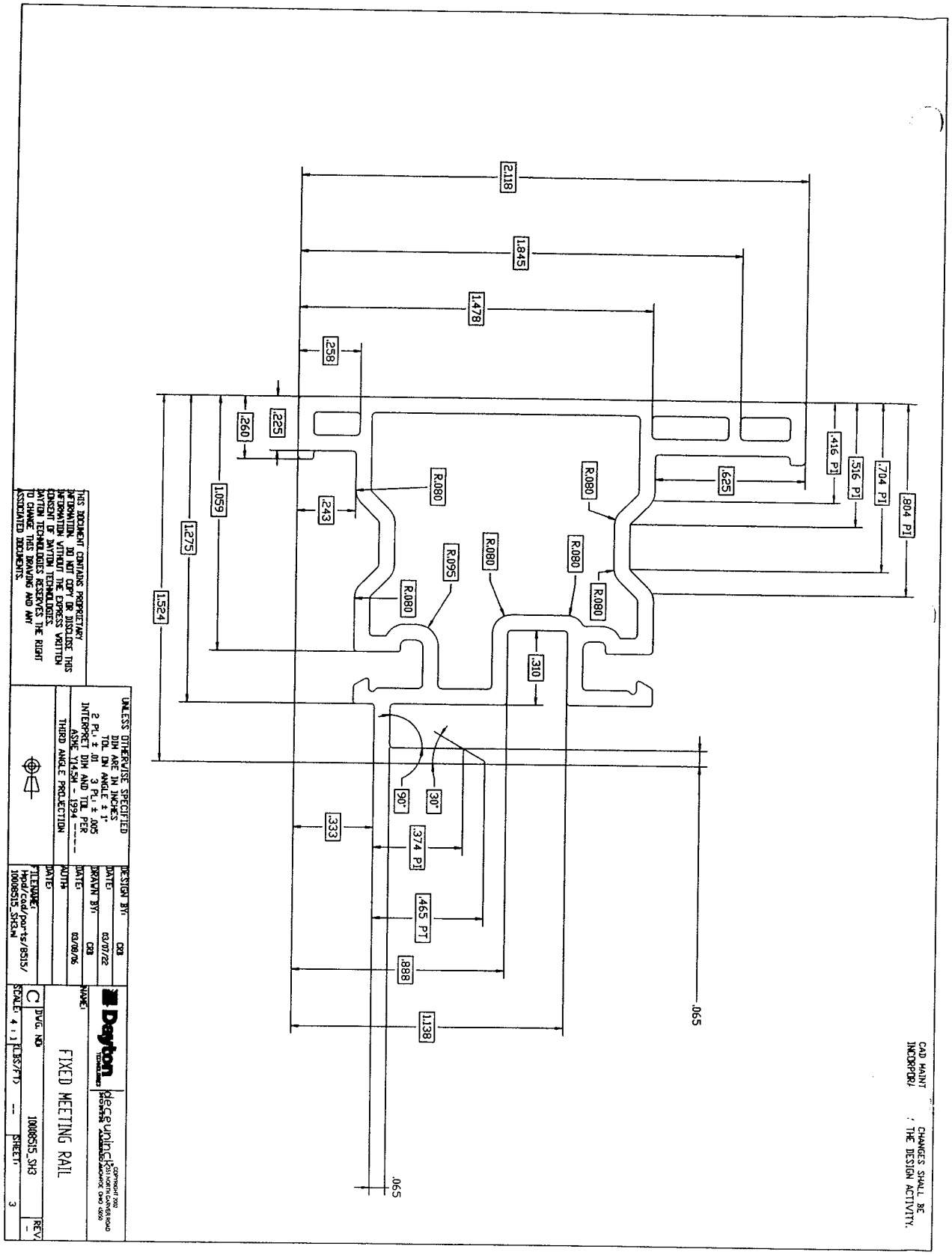

Architectural Testing

Test sample complies with these details.
Deviations are noted.

Report# 54090

Date 3/30/05 Tech CR

CAD MAINTA' CHANGES SHALL BE
INCORPORAT THE DESIGN ACTIVITY.

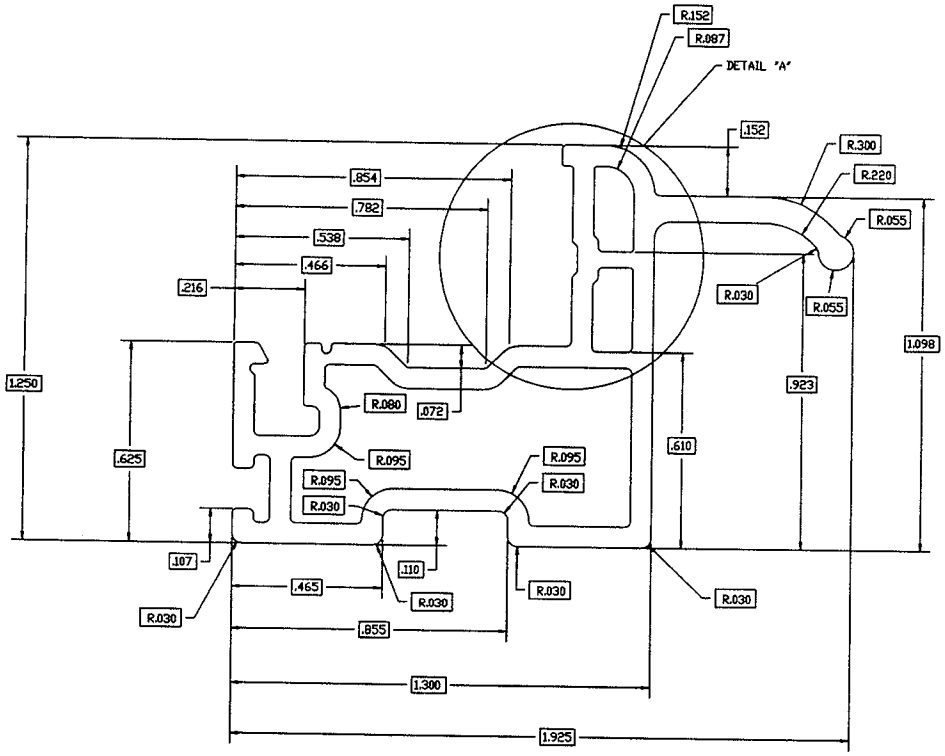

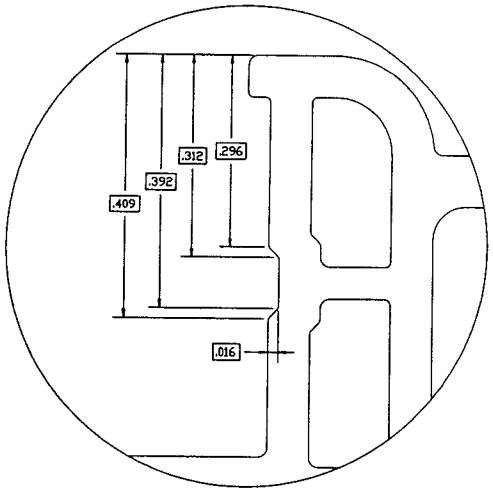

DETAIL "A"
SCALE 8 : 1

Architectural Testing

Test sample complies with these details.
Deviations are noted.

Report# 54090

Date 3/30/05 Tech EBL

THIS DOCUMENT CONTAINS PROPRIETARY INFORMATION. DO NOT COPY OR DISCLOSE THIS INFORMATION WITHOUT THE EXPRESS WRITTEN CONSENT OF DAYTON TECHNOLOGIES. DAYTON TECHNOLOGIES RESERVES THE RIGHT TO CHANGE THIS DRAWING AND ANY ASSOCIATED DOCUMENTS.

UNLESS OTHERWISE SPECIFIED
DIM ARE IN INCHES
TOL ON ANGLE ± 1°
2 PL: ± .01 3 PL: ± .005
INTERPRET DIM AND TOL PER
ASME Y14.5M - 1994 ----
THIRD ANGLE PROJECTION

DESIGN BY:	CRB
DATE:	03/11/07
DRAWN BY:	CRB
DATE:	03/11/08
AUTH:	
DATE:	
FILENAME:	Hpd/cad/parts/8840/10008840_SH3

Dayton TECHNOLOGIES deceuninck NORTH AMERICA

COPYRIGHT 2002
241 NORTH CARVER ROAD
MONROE, OHIO 45050

NAME: PULL/LIFT SASH

C | DWG. NO: 10008840_SH3 | REV. A

SCALE: 4 : 1 | (LBS/FT): -.— | SHEET: 3

CAD MAINT CHANGES SHALL BE
INCORPORA THE DESIGN ACTIVITY.

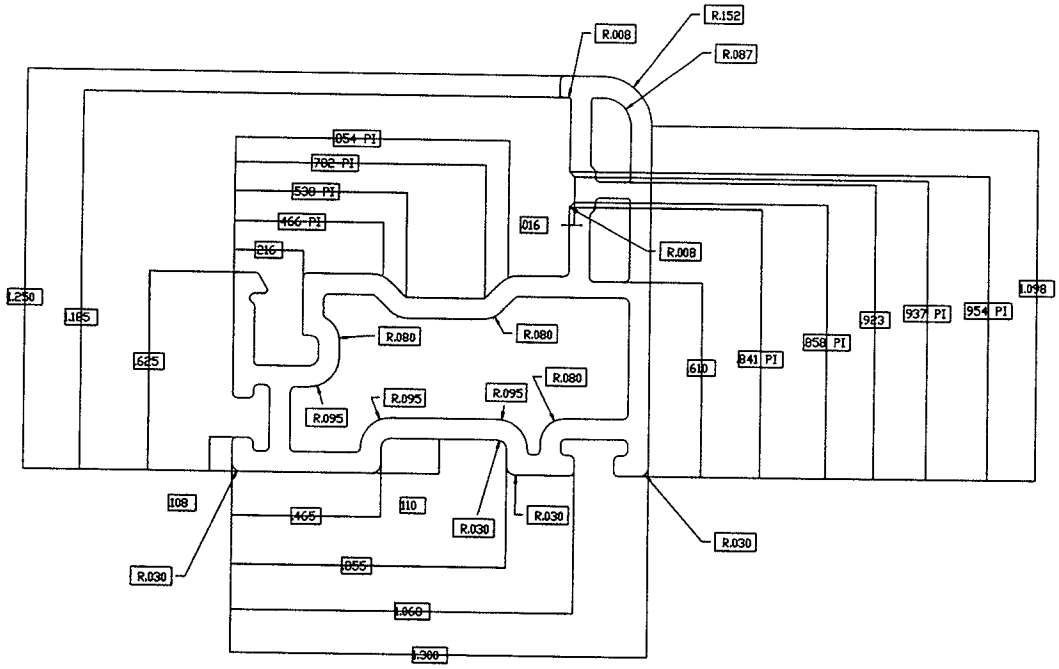

THIS DOCUMENT CONTAINS PROPRIETARY INFORMATION. DO NOT COPY OR DISCLOSE THIS INFORMATION WITHOUT THE EXPRESS WRITTEN CONSENT OF DAYTON TECHNOLOGIES. DAYTON TECHNOLOGIES RESERVES THE RIGHT TO CHANGE THIS DRAWING AND ANY ASSOCIATED DOCUMENTS.

UNLESS OTHERWISE SPECIFIED
DIM ARE IN INCHES
TOL ON ANGLE ± 1°
2 PL: ± .01 3 PL: ± .005
INTERPRET DIM AND TOL PER
ASME Y14.5M - 1994 ----
THIRD ANGLE PROJECTION

DESIGN BY:	CRB
DATE:	03/11/06
DRAWN BY:	CRB
DATE:	03/11/06
AUTH:	
DATE:	
FILENAME:	Hpd/cad/parts/8842/10008842_SH3.wl

Dayton TECHNOLOGIES decsuninc COPYRIGHT 2002 2051 NORTH GARVER ROAD MONROE, OHIO 45050

NAME: MAIN SASH

C DWG. NO: 10008842_SH3 REV: -

SCALE: 4 : 1 (LBS/FT) -- SHEET: 3

Architectural Testing

Test sample complies with these details.
Deviations are noted.

Report# 54096

Date 3/30/05 Tech EJL

CAD MAINT CHANGES SHALL BE
INCORPOR/ / THE DESIGN ACTIVITY.

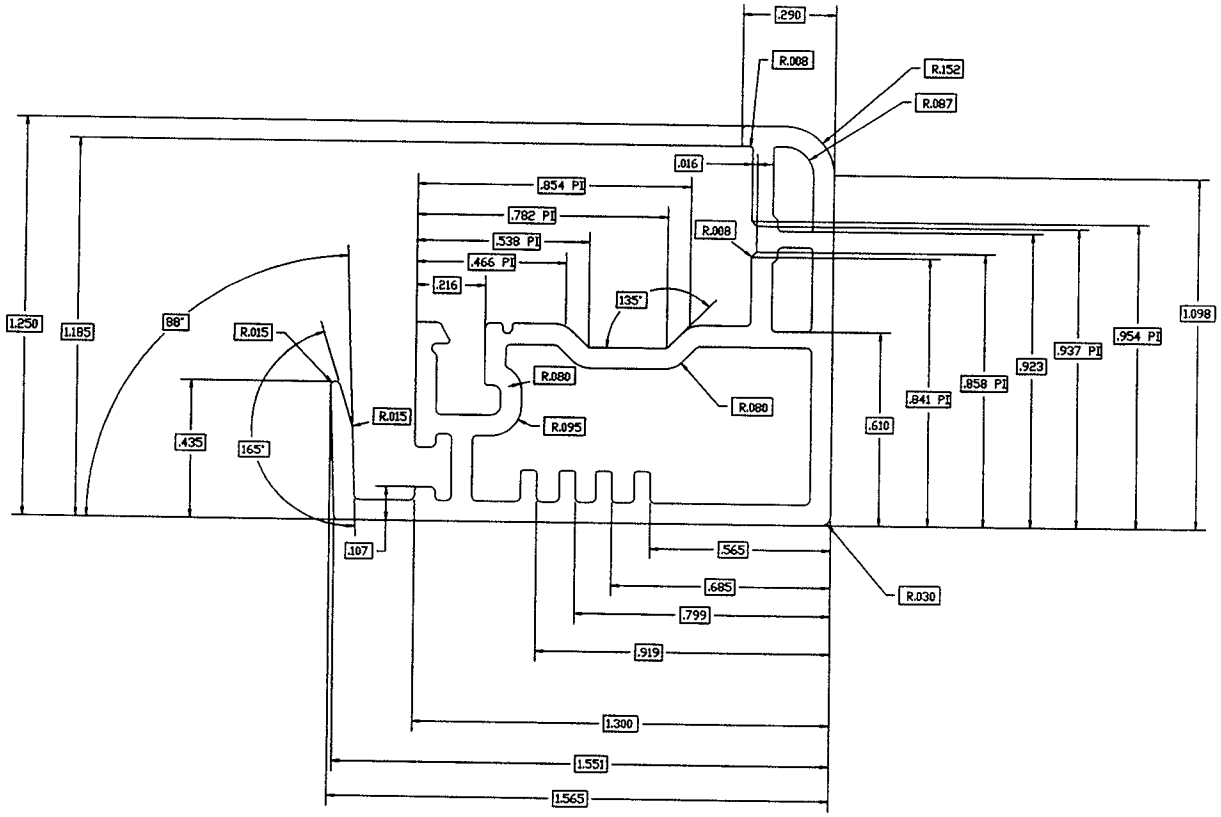

THIS DOCUMENT CONTAINS PROPRIETARY INFORMATION. DO NOT COPY OR DISCLOSE THIS INFORMATION WITHOUT THE EXPRESS WRITTEN CONSENT OF DAYTON TECHNOLOGIES. DAYTON TECHNOLOGIES RESERVES THE RIGHT TO CHANGE THIS DRAWING AND ANY ASSOCIATED DOCUMENTS.

UNLESS OTHERWISE SPECIFIED
DIM ARE IN INCHES
TOL ON ANGLE ± 1°
2 PL: ± .01 3 PL: ± .005
INTERPRET DIM AND TOL PER
ASME Y14.5M - 1994 ----
THIRD ANGLE PROJECTION

DESIGN BY:	CRB
DATE:	03/11/11
DRAWN BY:	CRB
DATE:	03/11/11
AUTH:	
DATE:	
FILENAME:	Hpd/cad/parts/8845/10008845_SH3.wl

Dayton TECHNOLOGIES decelunich NORTH AMERICA
COPYRIGHT 2002
2551 NORTH GARVER ROAD MONROE, OHIO 45050

NAME: LOCK SASH

C DWG. NO: 10008845_SH3 REV: -

SCALE: 4 : 1 (LBS/FT) -- SHEET: 3

Architectural Testing

Test sample complies with these details.
Deviations are noted.

Report# 54090

Date 3/30/05 Tech EJV

CAD MAINTAIN[illegible] HANGES SHALL BE
INCORPORATE[illegible] E DESIGN ACTIVITY.

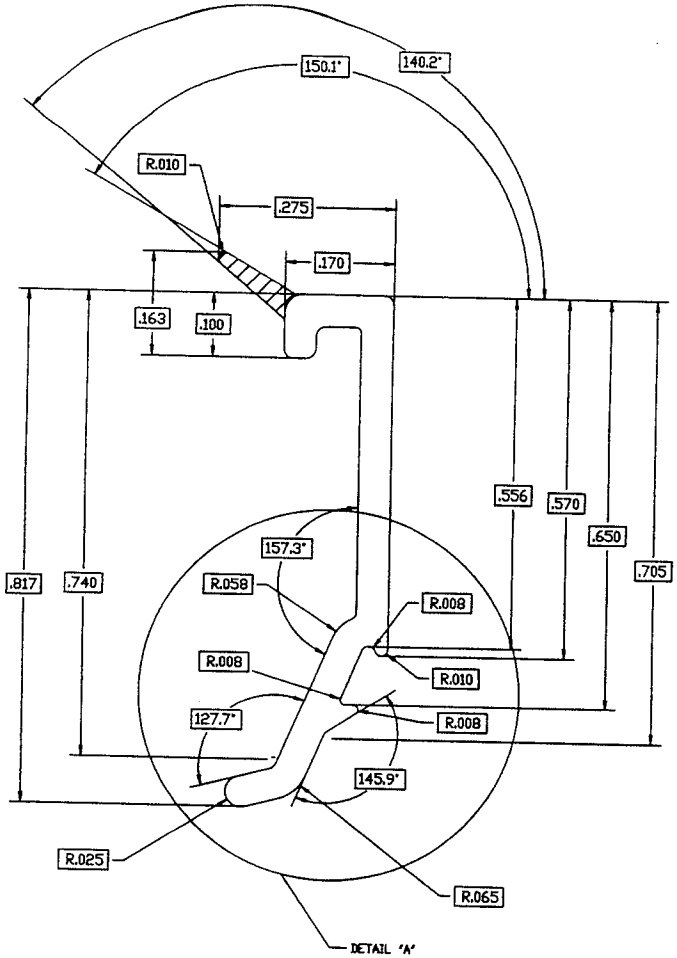

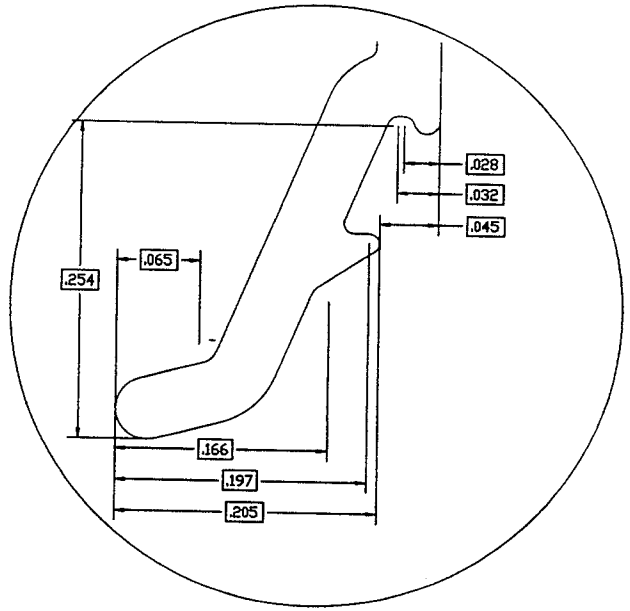

DETAIL 'A'
SCALE 16:1

Architectural Testing

Test sample complies with these details.
Deviations are noted.

Report# 54096
Date 3/30/05 Tech BL

THIS DOCUMENT CONTAINS PROPRIETARY INFORMATION. DO NOT COPY OR DISCLOSE THIS INFORMATION WITHOUT THE EXPRESS WRITTEN CONSENT OF DAYTON TECHNOLOGIES. DAYTON TECHNOLOGIES RESERVES THE RIGHT TO CHANGE THIS DRAWING AND ANY ASSOCIATED DOCUMENTS.

UNLESS OTHERWISE SPECIFIED
DIM ARE IN INCHES
TOL ON ANGLE ± 1°
2 PL: ± .01 3 PL: ± .005
INTERPRET DIM AND TOL PER
ASME Y14.5M - 1994
THIRD ANGLE PROJECTION

DESIGN BY:	ASD, PGM
DATE:	90/10/19
DRAWN BY:	CRB
DATE:	02/12/02
AUTH:	
DATE:	
FILENAME:	Hpd/cad/parts/ 02/10008127.SKD

Dayton TECHNOLOGIES decelnlnc COPYRIGHT 2002 261 NORTH GARVER ROAD MONROE, OHIO 45050

NAME: GLAZING BEAD

C	DWG. NO	10008127	REV -
SCALE: 8 : 1	WEIGHT: -.-	SHEET: 3	

UNLESS OTHERWISE NOTED THE FOLLOWING TOLERANCES APPLY
.001 - .100 ± .005 1.001 - 1.500 ± .020
.101 - .500 ± .010 1.501 - 2.000 ± .025
.501 - 1.000 ± .015 2.001 - & UP ± .030
UNSPECIFIED ANGLES ± 1° - WOODGRAIN SURFACES ADD .007

NOTES:
1. ALL UNSPECIFIED WALL THICKNESS = .062
2. ALL UNSPECIFIED CORNERS AND FILLETS = .015 R

—— = EXPOSED SURFACE —— = WOODGRAIN SURFACE

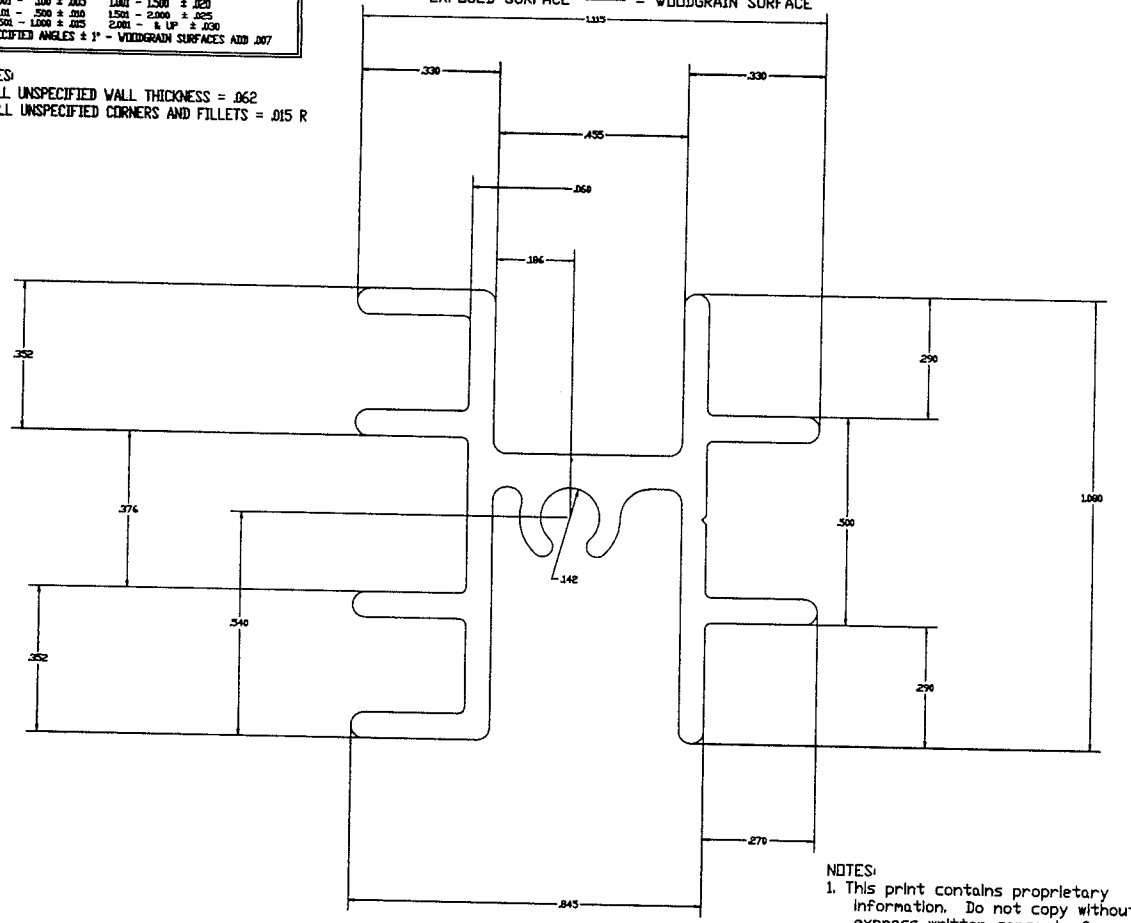

REV.	DATE	DESCRIPTION	BY
-	--/--/--	-----	---

NOTES:
1. This print contains proprietary information. Do not copy without express written consent of DAYTON TECHNOLOGIES.
2. DAYTON TECHNOLOGIES reserves the right to change specifications.

	Rigid:	Cap:	Flex:	Alum:	Total
Part Wt. (Lbs/Ft)	----	----	----	.341	.341
	----	----	----	----	----

DAYTON TECHNOLOGIES
AN ALCOA COMPANY
MONROE, OHIO
Copyright 1996

NAME:	MEETING RAIL REINFORCEMENT		
DRAWN BY:	CRB	DATE:	03/12/96
CHECKED BY:		DATE:	
SCALE:	4 : 1 "B"	COLOR:	☐WH ☐BS ☐BR ☐EV ☐OTH
CUST. PART NO:	-----	PART DWG NO:	A6189

Architectural Testing
Test sample complies with these details.
Deviations are noted.
Report# 54060
Date 3/30/05 Tech ESL

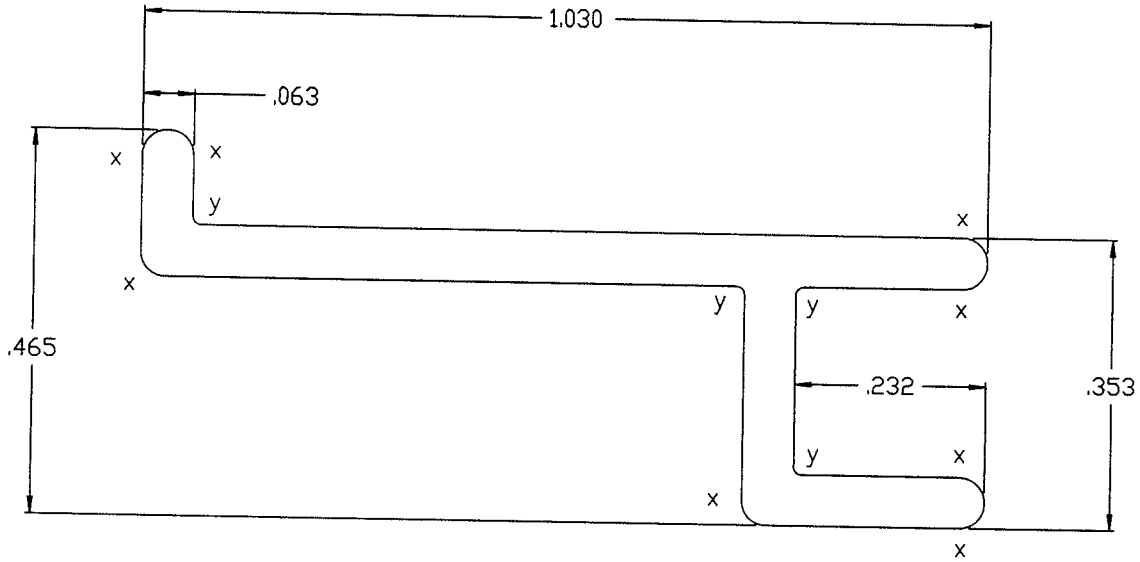

Notes:
1) "x" = .030" radius
2) "y" = .010" radius

Area :	.103 Sq. In.
Weight :	.123 Lb./Ft.

Standard Commercial Tolerances Apply Unless Otherwise Noted

DAYTON EXTRUDED PLASTICS
SPRINGBORO, OHIO
Copyright 1994

NAME:	0093 SASH REINFORCEMENT		
MATERIAL(S):	ALUMINUM		
DRAWN BY:	DAS	DATE:	3/22/94
CHECKED BY:		DATE:	
SCALE:	5 : 1 'A'	PART DWG. NO:	A6202
CUST. PART NO:	6202	DIE NO:	6202

Architectural Testing
Test sample complies with these details.
Deviations are noted.
Report# 54096
Date 3/30/05 Tech ESL

CAD MAINTA' CHANGES SHALL BE
INCORPORAT. THE DESIGN ACTIVITY.

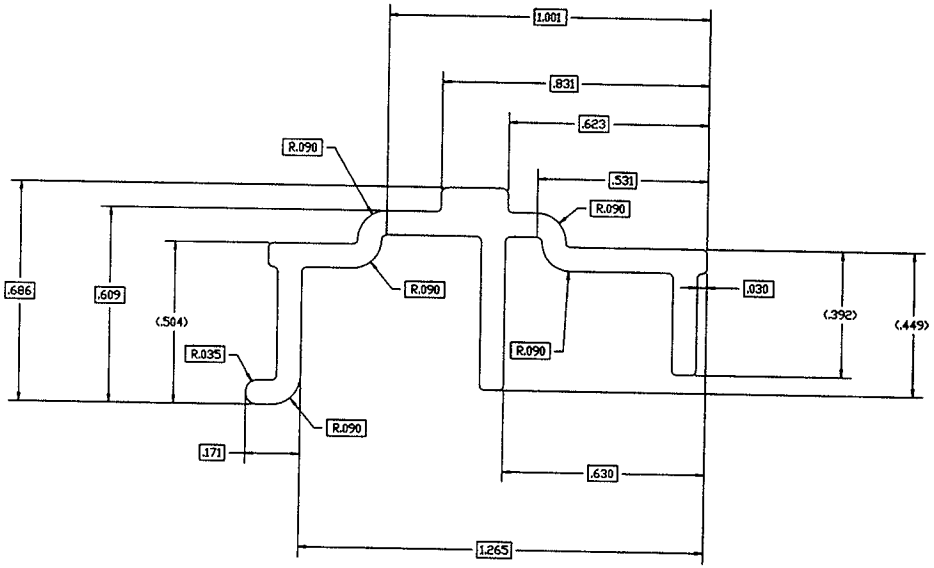

Architectural Testing

Test sample complies with these details.
Deviations are noted.

Report# 54090

Date 3/30/05 Tech ESR

THIS DOCUMENT CONTAINS PROPRIETARY INFORMATION. DO NOT COPY OR DISCLOSE THIS INFORMATION WITHOUT THE EXPRESS WRITTEN CONSENT OF DAYTON TECHNOLOGIES. DAYTON TECHNOLOGIES RESERVES THE RIGHT TO CHANGE THIS DRAWING AND ANY ASSOCIATED DOCUMENTS.

UNLESS OTHERWISE SPECIFIED
DIM ARE IN INCHES
TOL ON ANGLE ± 1°
2 PL: ± .01 3 PL: ± .005
INTERPRET DIM AND TOL PER
ASME Y14.5M - 1994 ----
THIRD ANGLE PROJECTION

DESIGN BY:	CRB
DATE:	04/03/31
DRAWN BY:	CRB
DATE:	04/03/31
AUTH:	
DATE:	
FILENAME:	Hpd/cad/parts/8466/10008466_SH3

Dayton TECHNOLOGIES deceuninck SHOWPRIDE AMERICAS

COPYRIGHT 2004
351 NORTH GARVER ROAD
MONROE, OHIO 45050

NAME: SLIDER TRACK INSERT

C	DWG. NO: 10008466	REV. A

SCALE: 4 : 1 (LBS/FT) --- SHEET: 3

SPACER

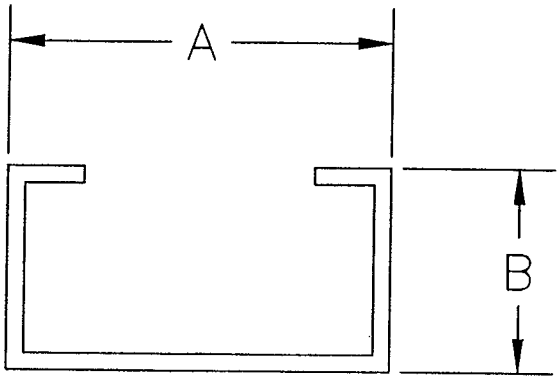

...aterial: STEEL
Width (A): 0.512", 0.45", 0.325"
Height (B): 0.300"
Wall Thickness: 0.010"

Architectural Testing

Test sample complies with these details.
Deviations are noted.

Report# 54090
Date 3/30/05 Tech ESL

SPACER

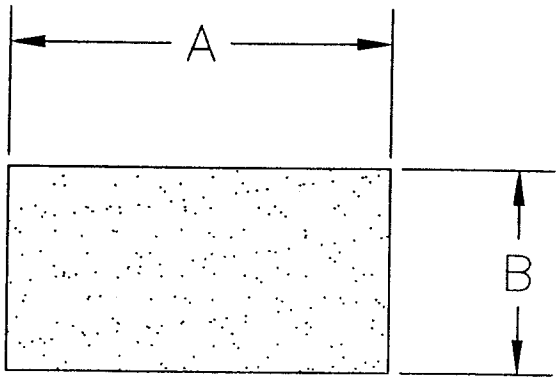

Material: SILICONE FOAM
Width (A): 0.563, 0.500, 0.375
Height (B): 0.188
Wall Thickness: N/A

Architectural Testing

Test sample complies with these details.
Deviations are noted.

Report# 54090
Date 3/30/05 Tech BL

Legend

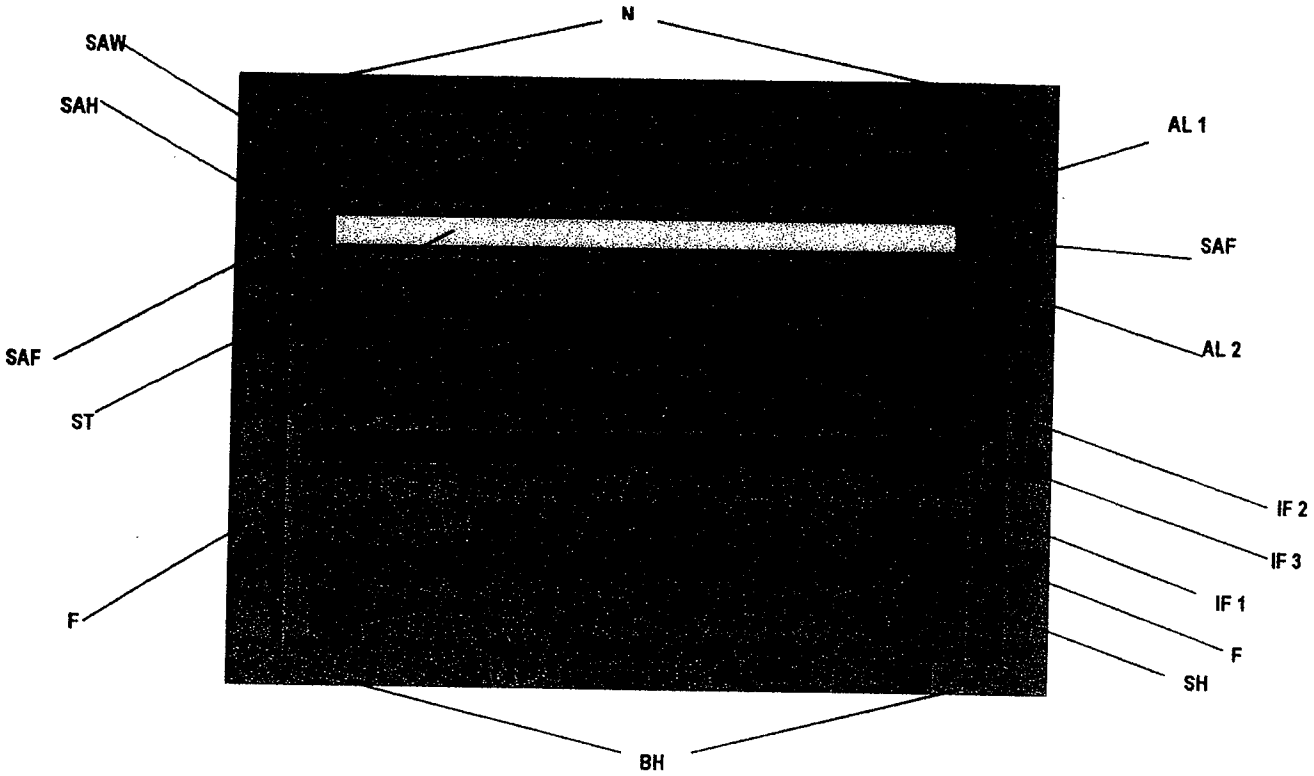

	Description	Material and Conductivity Imp	SI
N	71X	Butyl 1.603 Btu in/hr ft^2 °F	0.231 W/m/°C
BH	71X	Butyl 1.603 Btu in/hr ft^2 °F	0.231 W/m/°C
TL	71X	Butyl 1.603 Btu in/hr ft^2 °F	0.231 W/m/°C
SAW	Moisture vapour barrier	Default polyethylene	Default polyethylene
SAH	Moisture vapour barrier	Default polyethylene	Default polyethylene
ST	Stiffener	Polypropylene 1.53 Btu in/hr ft^2 °F	0.221 W/m/°C
SH	Shim	Default aluminum	Default aluminum
AL 1 2	Adhesive	Butyl 1.603 Btu in/hr ft^2 °F	0.231 W/m/°C
AC 1 3 4	**Default cavity**	**Default cavity**	
AC 2	**still air**	**still air – default conductivity**	**default still air***
SAF	Adhesive	Butyl 1.603 Btu in/hr ft^2 °F	0.231 W/m/°C
IF 1 2 3	Adhesive	Butyl 1.603 Btu in/hr ft^2 °F	0.231 W/m/°C
F	Adhesive	Butyl 1.603 Btu in/hr ft^2 °F	0.231 W/m/°C

*** Corrected from previous version**

If there are questions regarding this document please call

Rich Warren
Technical Service
TruSeal Technologies
416 438 1858
888 257 7610

Architectural Testing

Test sample complies with these details.
Deviations [illegible]ted.

Report# 54090

Date 3/30/05 [illegible] BR

DuraSeal™ Insuledge® and Swiggle® Seal are trademarks of

Airspace	PROD. CODE	Imperial				Metric			
		Decimal Airspace	Sy	W	H	Decimal Airspace	Sy	W	H
3/16	18B	0.188	1.172	0.188-0.217	0.281-0.[illegible]	4.80	4.38	4.80-5.51	7.38-7.62
15/64	20B	0.234	0.210	0.234-0.263	0.281-0.[illegible]	6.00	5.84	5.94-6.45	7.38-7.62
1/4	25B	0.250	0.235	0.250-0.279	0.283-0.[illegible]	6.40	6.87	6.35-7.06	7.18-7.42
5/16	31B	0.313	0.295	0.313-0.342	0.283-0.[illegible]	7.90	7.56	7.95-8.66	7.18-7.42
11/32	34B	0.344	0.329	0.344-0.373	0.283-0.[illegible]	8.70	8.35	8.73-9.47	7.18-7.42
3/8	37B	0.375	0.360	0.375-0.404	0.283-0.[illegible]	9.50	9.14	9.53-10.25	7.18-7.42
13/32	41B	0.406	0.487	0.406-0.435	0.283-0.[illegible]	10.30	10.34	10.31-11.05	7.18-7.42
7/16	43B	0.438	0.423	0.438-0.467	0.283-0.[illegible]	11.10	10.73	11.12-11.85	7.18-7.42
15/32	47B	0.469	0.456	0.469-0.498	0.283-0.[illegible]	11.90	11.43	11.91-12.65	7.18-7.42
31/64	49B	0.484	0.458	0.484-0.513	0.283-0.[illegible]	12.30	11.43	12.19-12.93	7.18-7.42
1/2	50B	0.500	0.486	0.500-0.529	0.283-0.[illegible]	12.70	12.32	12.70-13.45	7.18-7.42
17/32	53B	0.531	0.515	0.531-0.560	0.281-0.[illegible]	13.50	13.08	13.48-14.22	7.38-7.62
9/16	56B	0.563	0.548	0.563-0.592	0.281-0.[illegible]	14.30	13.91	14.30-15.04	7.38-7.62
39/64	61B	0.609	0.595	0.609-0.638	0.281-0.[illegible]	15.50	15.24	15.47-16.21	7.38-7.62
5/8	63B	0.625	0.610	0.625-0.654	0.281-0.[illegible]	15.90	15.49	15.88-16.61	7.38-7.62
11/16	69B	0.688	0.672	0.688-0.717	0.281-0.[illegible]	17.50	17.06	17.48-18.21	7.38-7.62
13/16	81B	0.813	0.798	0.813-0.842	0.281-0.[illegible]	20.60	20.28	20.65-21.39	7.38-7.62

This Usage:

Architectural Testing

Test sample complies with these details.
Deviations noted.

Report# 54070

Date 3/30/05 Tech BR

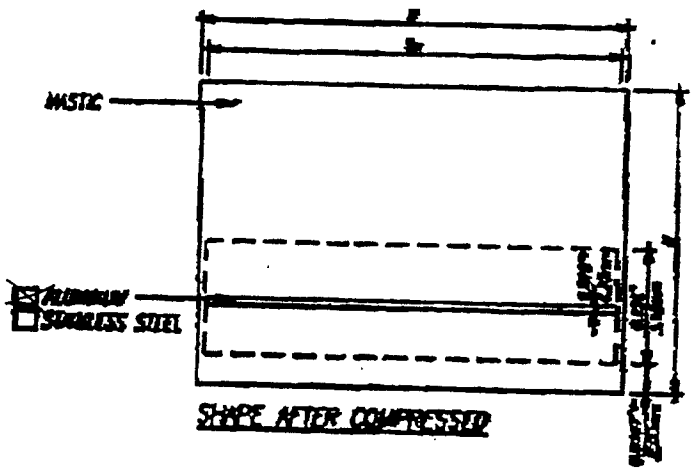

TRUSEAL Technologies

PRODUCT NAME: SPACER LIBRARY FOR SIMULATORS

DRAWING TITLE: SWIGGLE SINGLE SEAL

DRAWN BY: E.A.E.

DATE: 29 SEPT 00

PROJECT NO.: TRUODSW

CHECKED BY: M.H.

SCALE: N.T.S.

DRAWING NO.: 1

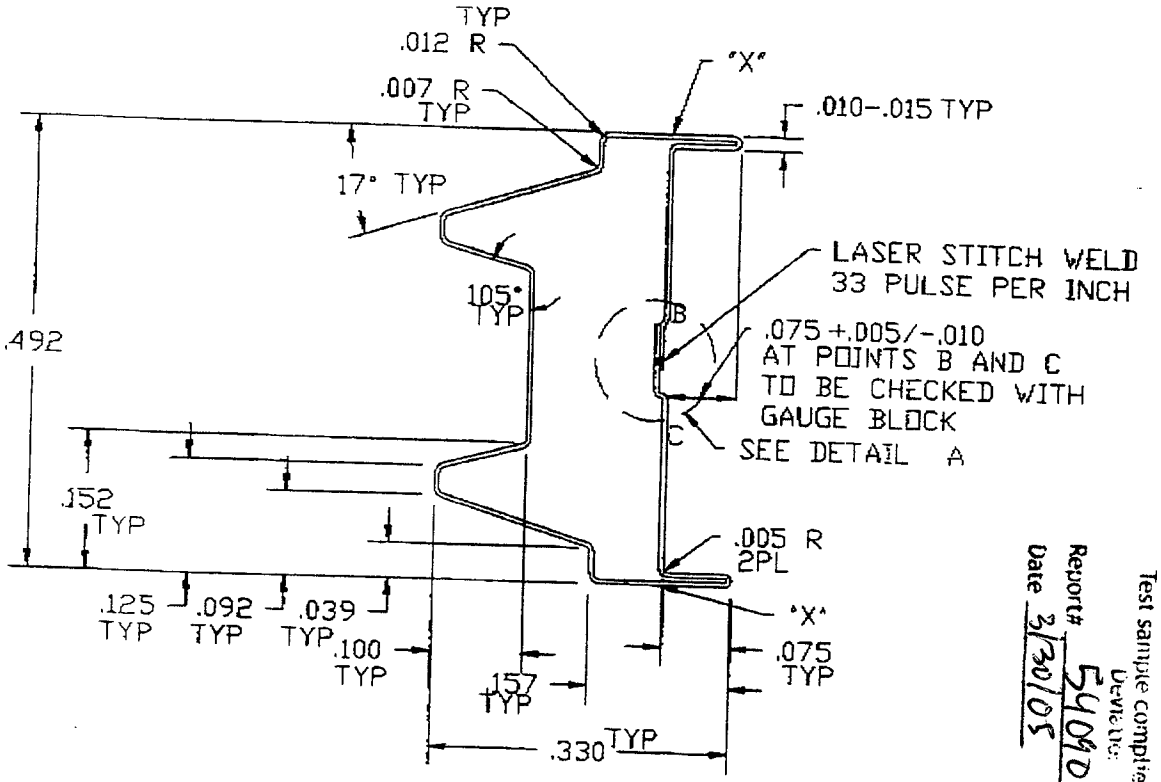

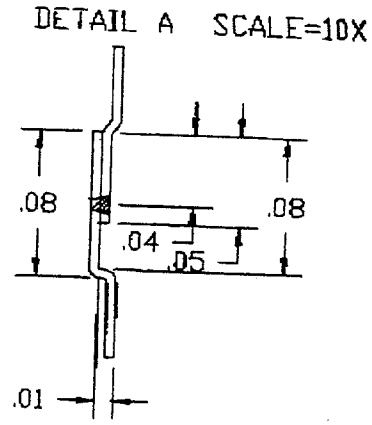

Architectural Testing

Test sample complies with these details.
Device Tested.
Report# 54090
Date 3/30/05
Tech ESL

NOTE:

1. MATERIAL: 201 STAINLESS STEEL, .0050 +/-.00025 WALL THICKNE ANNEALED TEMPER, 1 CBA FINISH.
2. LASER STITCH WELD 33 PULSE PER INCH, NO EXTERIOR FLASH, NO THROUGH BURNS.
3. SURFACES LABELED "X" MUST BE PARALLEL TO EACH OTHER.
4. SPACER MUST BE CLEAN AND FREE OF DIRT AND OILS.

REV.	DATE	DESCRIPTION	BY
C	12/9/93	REDRAWN	WAZ
B	3/12/93	P/N WAS 30-130	WAZ
A	2/8/93	P/N WAS 1311 SST U-BACK	WAZ
—	1/10/91	RELEASED	SC

CARDINAL IG

ALL RIGHTS ARE EXPRESSLY RESERVED BY CARDINAL IG

TITLE: 13.0mm SST U SPACER

SCALE: 5X | DATE: 1/10/91 | DRAWN BY: SC | APPROV

TOLERANCES: .XXX=+/-.005

PART: 33-130

ALLMETAL

Muntin Bar

Painted, Mill Finish and Anodized Aluminum

TOLERANCE
A, ± .005 .127mm
B, ± .005 .127mm

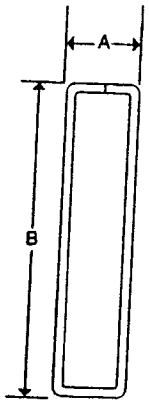

The seller hereby expressly disclaims all warranties either expressed or implied, including any implied warranty of merchantability or fitness for a particular purpose. Products are sold "As Is" and on the condition that the purchasers shall make their own tests to determine the merchantability of such products and their fitness for any particular purpose. The liability of ALLMETAL, INC. for special, indirect or consequential damages for injury to a property for any reason or for any other loss resulting from a product defect or failure shall be limited to the purchase price of the product.

SPECIAL NOTICE
Cleaning and Handling of Muntin Bar

We recommend muntin bar to be wiped clean before installation into an insulating glass unit. A household grade liquid cleaner may be used for this purpose.

To avoid breakdown of painted surfaces, do not use M.E.K., Triethane, Alcohol or like substances for the cleaning of painted muntin bar.

When machining and processing muntin bar in your plant, keep saw tables and work areas free of saw cut filings to avoid scratching the painted surfaces.

FRACTIONAL DECIMAL IN INCHES

Size	A	B
3/16x1/2	.187	.500
3/16x9/16	.187	.551
3/16x5/8	.187	.630
* 3/16x.610	.187	.610
3/16x3/4	.187	.775
3/16x13/16	.187	.801
3/16x1	.187	1.000
1/4x5/16	.235	.313
1/4x9/16	.235	.562
1/4x5/8	.235	.625
1/4x3/4	.235	.765
1/4x1	.235	1.000
3/8x5/8	.325	.625
3/8x3/4	.325	.750
3/8x7/8	.325	.875
3/8x1	.325	1.000
1/2x3/4	.500	.750
1/2x1/2	.500	.500
1/2x1	.500	1.000
7/16x3/8	.425	.375
7/16x5/8	.438	.625
7/16x1	.438	1.000
5/8x5/8	.625	.625

* Available in Tutone

Muntin Bar-ZT & PT – Laser-Welded

Mill Finish and Anodized Aluminum

TOLERANCE

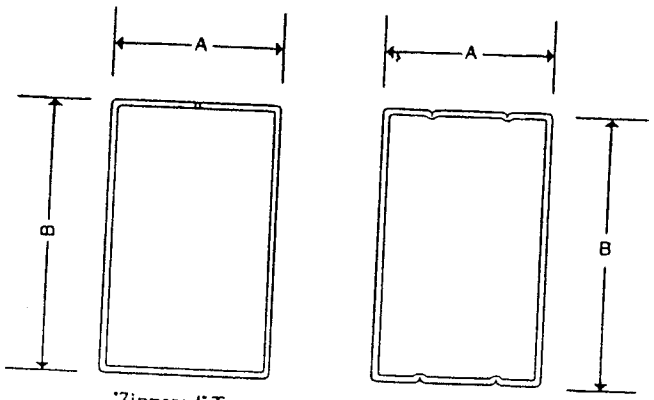

"Zippered" Top

Perforated Top

FRACTIONAL DECIMAL IN INCHES

Size	A	B
.187 x .500	.187	.500
.187 x .625	.187	.625
.187 x .750	.187	.750
.187 x 1.00	.187	1.00
.235 x .500	.235	.500
.235 x .625	.235	.625
.235 x 1.00	.235	1.00
.250 x .750	.250	.750
.312 x .500	.312	.500
.312 x .625	.312	.625
.325 x .500	.325	.500
.325 x .625	.325	.625
.325 x .750	.325	.750
.325 x .875	.325	.875
.325 x 1.00	.325	1.00
.375 x .500	.375	.500
.375 x .625	.375	.625
.437 x .500	.437	.500
.500 x .500	.500	.500
.437 x .625	.437	.625
.625 x .625	.625	.625

Muntin B

Architectural Testing

Test sample complies with these details.
Devia[illegible] [illegible]ted.

Report# 54090
Date 3/30/05 Tech [illegible]

NOTE: ALL DIMENSIONS IN [] BRACKETS ARE MM UNLESS NOTED

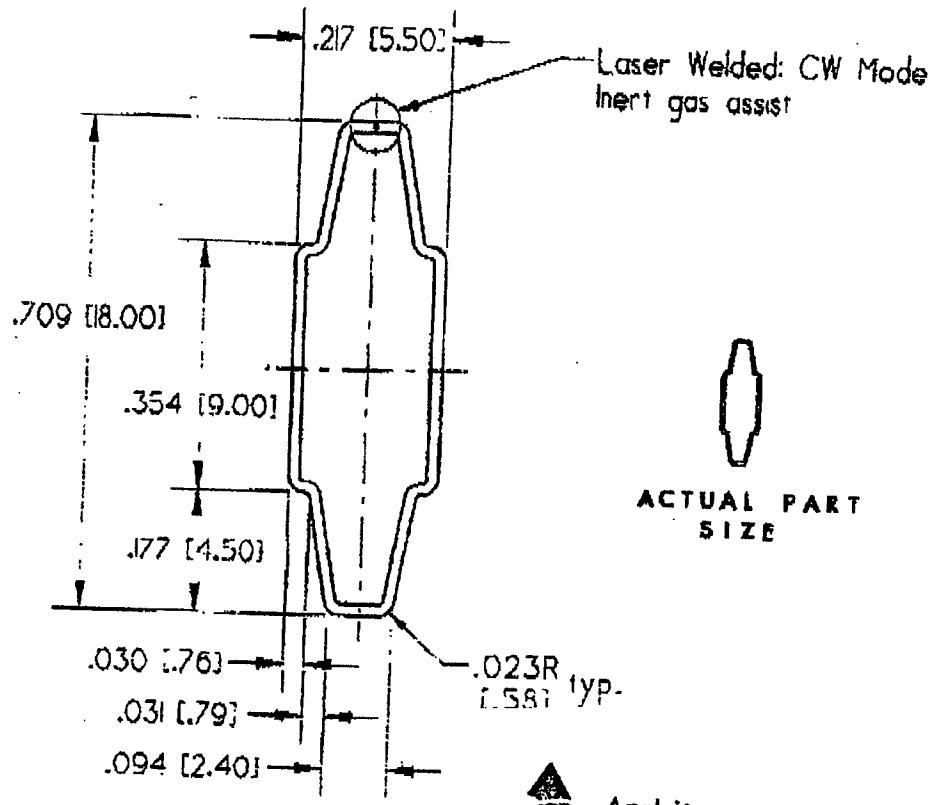

Architectural Testing

Test sample complies with these details.
Drawing [illegible] ted.

Report# 54090

Date 3/30/05 Tech ESL

DATE	SYM.	REVISION	AUTH.	DRN.	CK.
4/17/97		Weld note changed. Title block changed		GRM	
12/9/92		Initial Release		GRM	

ALLMETAL

INFORMATION SHOWN ON THIS PRINT IS PROPRIETARY. THIS DRAWING IS NOT TO BE REPRODUCED EITHER WHOLLY OR IN PART WITHOUT THE EXPRESS PERMISSION OF ALLMETAL INC.

TOLERANCES EXCEPT AS NOTED
DECIMAL INCHES .XX .XXX .XXXX ± .01 .005 .0002
DECIMAL MM .XX .XXX ± .13 .06
ANGULAR ± 1°

TITLE: 5.5 x 18mm Contour Muntin Bar (CMB)

MATL. .016" [.41mm] 3105 Aluminum

FINISH FULL RANGE (MILL, ANOD., PAINTED)

DRN. BY G. Matthews
CK. BY
APPR. BY
S.O. NO.

SCALE 4:1 DATE 4/17/97 DWG. NO. 102030101OXX255

FILENAME:CMB5518J

NOTE: ALL DIMENSIONS IN [ ] BRACKETS ARE MM UNLESS NOTED

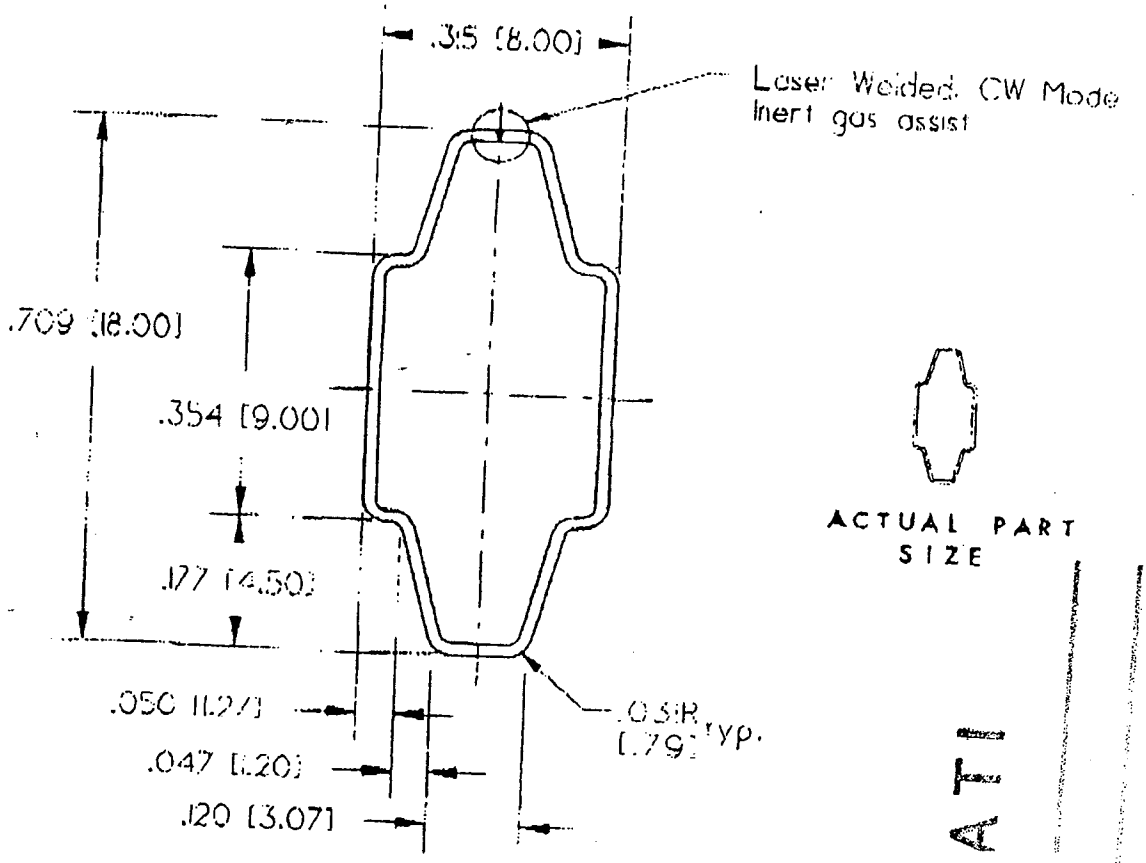

Architectural Testing

Test sample complies with these details.
Deviations are noted.

Report# 54090

Date 3/30/05 Tech ESL

DATE	SYM.	
4/17/97		Weld note changed, T
12/9/92		Initial Release

ALLMETAL

TOLERANCES EXCEPT AS NOTED	TITLE 8 x 18mm Contour Muntin Bar (CMB)
DECIMAL INCHES .XX .XXX .XXXX ± .01 .005 .0002	MATL. .016" [.41mm] 3105 Aluminum
DECIMAL MM .XX .XXX ± .13 .06	FINISH FULL RANGE (MILL, ANOD., PAINTED)
ANGULAR ± 1°	SCALE 4:1 / DATE 4/17/97 / DWG. NO. 102030101OXX280

DRN. BY G. Matthews
CK. BY
APPR. BY
S.O. NO.

FILENAME: CMB818J

NOTE: ALL DIMENSIONS IN [ ] BRACKETS ARE MM UNLESS NOTED

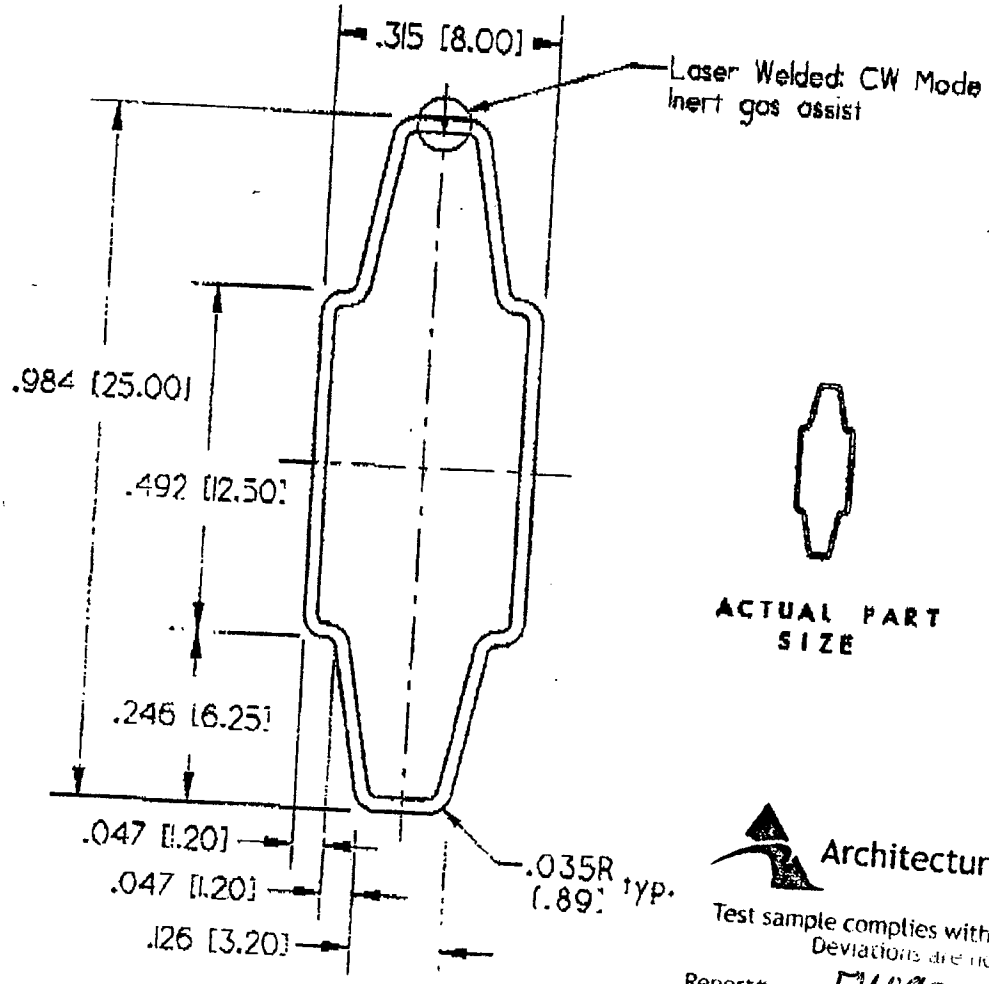

Architectural Testing

Test sample complies with these details.
Deviations are noted.

Report# 54090

Date 3/30/05 Tech ESL

DATE	SYM.	REVISION	AUTH.	DRN.	CK.
4/17/97		Weld note changed. Title block changed		GRM	
4/1/95		Gauge changed from .016 to .020		GRM	
12/9/92		Initial Release		GRM	

ALLMETAL

INFORMATION SHOWN ON THIS PRINT IS PROPRIETARY. THIS DRAWING IS NOT TO BE REPRODUCED EITHER WHOLLY OR IN PART WITHOUT THE EXPRESS PERMISSION OF ALLMETAL INC.

TOLERANCES EXCEPT AS NOTED
DECIMAL INCHES .XX ±.01 .XXX .005 .XXXX .0002
DECIMAL MM .XX ±.13 .XXX .05
ANGULAR ± 1°

TITLE: 8 x 25mm Contour Muntin Bar (CMB)

MATL. .020" [.51mm] 3105 Aluminum

FINISH FULL RANGE (MILL, ANOD., PAINTED)

SCALE 4:1

DATE 4/17/97

DWG. NO. 1020301010XX380

DRN. BY G. Matthews

CK. BY

APPR. BY

S.O. NO.

FILENAME:CMB825J

NOTE: ALL DIMENSIONS IN [] BRACKETS ARE MM UNLESS NOTED

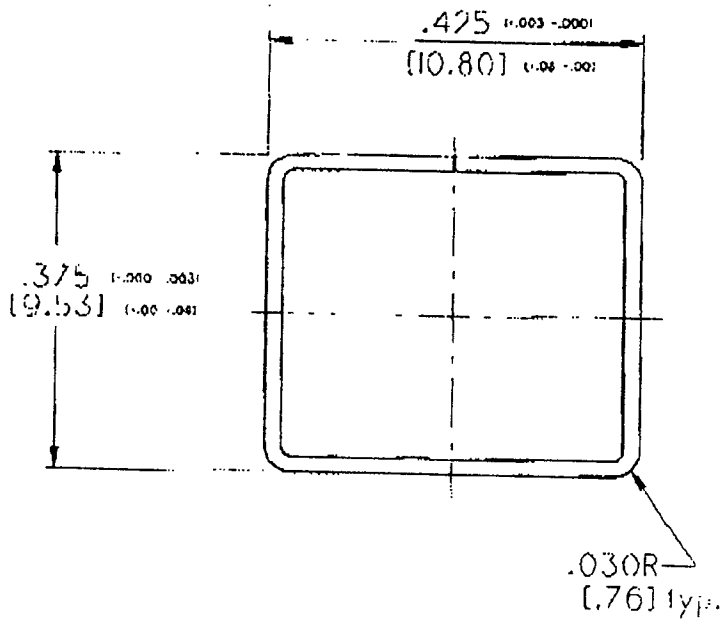

Architectural Testing

Test sample complies with these details.
Deviations are noted.

Report# 54090

Date 3/30/05 Tech SL

ACTUAL PART SIZE

DATE	SYM.	REVISION	AUTH.	DRN.	CK.

ALLMETAL

INFORMATION SHOWN ON THIS PRINT IS PROPRIETARY THIS DRAWING IS NOT TO BE REPRODUCED EITHER WHOLLY OR IN PART WITHOUT THE EXPRESS PERMISSION OF ALLMETAL INC.

TOLERANCES EXCEPT AS NOTED

DECIMAL INCHES .XX .XXX .XXXX ± .01 .005 .0002

DECIMAL MM .XX .XXX ± .13 .06

ANGULAR ± 1°

TITLE: 7/16 x 3/8 MB (Muntin Bar)

MATL.: .0185 [.47mm] 3105-H24 Aluminum

FINISH: ALL BUT ANODIZED

SCALE: 5:1

DATE: 11/15/01

DWG. NO.: 1020108018XX124

DRN. BY G. Masters

CK. BY

APPR. BY

S.O. NO.

FILENAME: \MB\0185\716X38

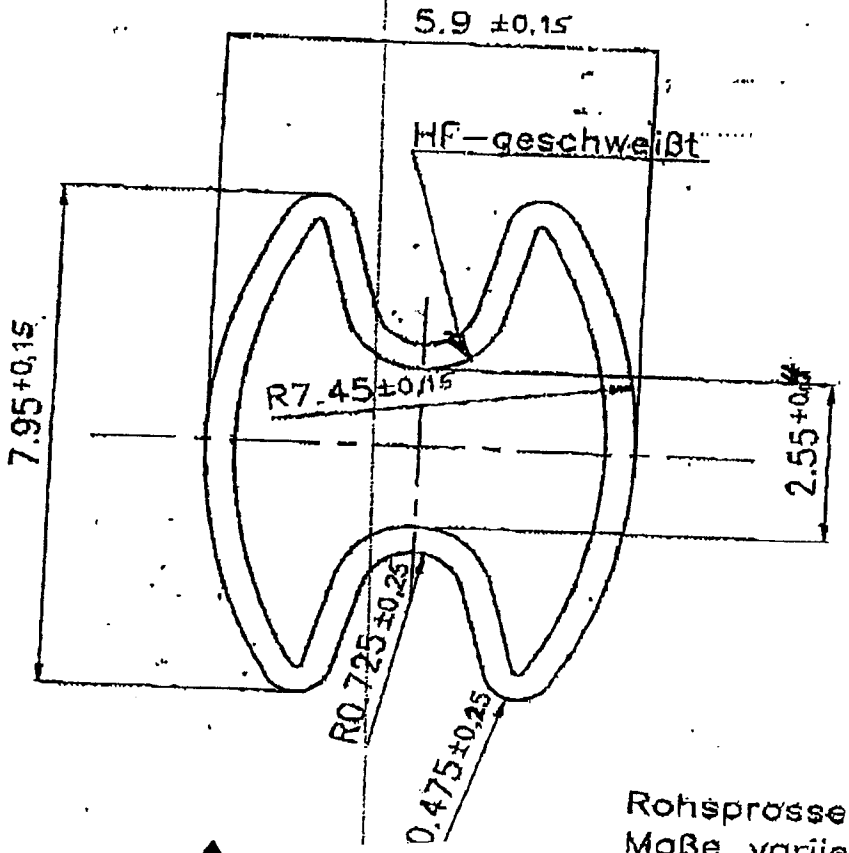

Rohsprosse!
Maße variieren je nach
Oberflächenbehandlung

Architectural Testing

Test sample complies with these details.
Deviations are noted.

Verteiler: BTL
GM
Produkt
AV

Report# 54090
Date 3/30/05 Tech BL

M1

Ä-Nr.	Art der Änderung	Datum	Name
1	Höhe u. Breite geändert	04.07.96	Höf.

Werkstoff: Bd 0,4 +0,04 −0,03 Al 99,85–ähnlich EN 1085/WN wahlweise EN AW–3003

1996	Tag	Name
Bearb.	24.01.	Höflinghoff
Gepr.		

Für diese Zeichnung bzw. techn. Unterlage behalten wir uns alle Rechte vor.

Helmut Lingemann GmbH & Co. Aluminium-Preß und Walzwerk Am Dockershäuschen 62 42111 Wuppertal

Maßstab: 10:1

Benennung: Einbausprosse, geschweißt

Maße ohne Tol.-Angabe DIN 7168-m

Zeichnungsnummer KP 8x1,5G

Ersetzt für KP8 0x1,5G Ä1

Ersetzt durch:

Ä-Nr. 1